FLANGED ELECTRONIC CIRCULATORS

# NEOS B

Wet-rotor permanent-magnet circulators - DN32 / DN40 / DN50 / DN65 / DN80




The NEOS B series combines a permanent-magnet synchronous motor with electronic circulation control. The stator is sealed; the fluid cools the motor and lubricates the bearings.

The design without a mechanical seal or fan helps reduce wear, noise and maintenance.

**EEI < 0,23**

**Built-in Wi-Fi | PWM1 / PWM2**

## Applications

Hydronic systems, heat pumps, radiant heating, fan-coil and air-handling-unit circuits, heat-exchanger circulation and plant-room circuits.

| Characteristic | Data |
|---|---|
| Power supply | Single-phase 1~230 V, 50/60 Hz |
| Pumped fluid | Water or dilute, clean, non-corrosive and non-explosive liquids |
| Fluid temperature | From +2 °C to +110 °C |
| Operating ambient temperature | From 0 °C to +40 °C |
| Maximum system pressure | 1,0 MPa (10 bar) |
| Protection / insulation class | IP44 / class F |
| Impeller material | Polymer |

Operating condition: the liquid temperature must be higher than the ambient temperature.

**One Pump S.r.l. | Registered office: Via Tosarelli 67, 40055 CASTENASO (BO)**
Operating office: Via P. Matteucci 4, 40057 GRANAROLO DELL'EMILIA (BO)
Tel.: +39 051 19616352 | Fax.: +39 051 531129
info@onepump.it | www.onepump.it

RANGE AND CONTROL MODES

# Models and control functions

Data for the flanged NEOS B models.

| NEOS B model | Code | DN | P (W) | I (A) | Weight (kg) | H at Q=0 (m) |
|---|---|---|---|---|---|---|
| 32/12F 220 | 4CI0061C | 32 | 400 | 2,6 | 13 | 12 |
| 40/12F 220 | 4CI0062C | 40 | 600 | 2,9 | 15,4 | 12 |
| 40/12F 250* | 4CI0063C | 40 | 600 | 2,9 | 17,2 | 12 |
| 40/18F 220 | 4CI0064C | 40 | 900 | 3,5 | 17,2 | 16,5 |
| 40/18F 250* | 4CI0065C | 40 | 900 | 3,5 | 17,4 | 16,5 |
| 50/12F 280 | 4CI0066C | 50 | 560 | 6,0 | 19 | 12 |
| 50/18F 280 | 4CI0067C | 50 | 1000 | 3,5 | 20,4 | 16,3 |
| 65/15F 340 | 4CI0068C | 65 | 1300 | 6,0 | 23,1 | 15 |
| 80/15F 360 | 4CI0069C | 80 | 1300 | 6,0 | 30,6 | 15 |

* Versions with compensation flanges included. Head H at zero flow: values from the performance table at n = 3000 r/min.

## Control modes and interfaces

| Function | Main description |
|---|---|
| AUTO | Automatically adapts to the system characteristics. |
| HS / PP / CP | Constant speed, proportional pressure and constant pressure; 6 selectable levels for each mode. |
| CT - temperature control | Six settings: 10, 20, 30, 40, 50 and 60 °C. |
| PWM1 / PWM2 | External PWM signal control; GT and ST control logic. |
| 0-10 V | Control through an optional module. |
| Wi-Fi / Smart Life | Control modes and parameters from a smartphone; iOS and Android app. |
| Night mode | Automatically reduces power in AUTO, PP, CP and CT modes. |

Built-in protection: low voltage, overcurrent, light load, blocked rotor, phase fault and overtemperature.

INSTALLATION DIMENSIONS

# Main dimensions

Dimensions in mm. The symbols refer to the drawings below.

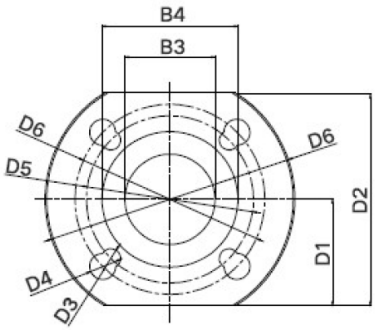


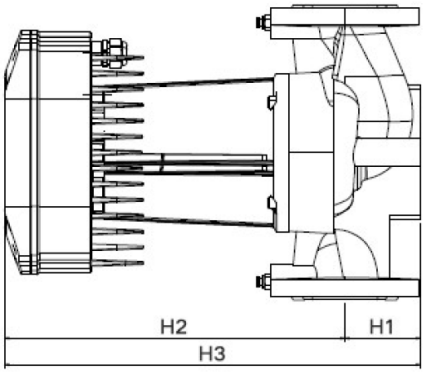


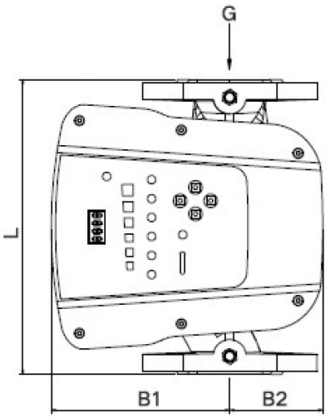


| NEOS B model | L | H1 | H2 | H3 | B1 | B2 |
|---|---|---|---|---|---|---|
| 32/12F 220 | 220 | 65 | 321,5 | 386,5 | 170 | 88,5 |
| 40/12F 220 | 220 | 65 | 321,5 | 386,5 | 170 | 88,5 |
| 40/12F 250* | 250 | 65 | 321,5 | 386,5 | 170 | 88,5 |
| 40/18F 220 | 220 | 65 | 321,5 | 386,5 | 170 | 88,5 |
| 40/18F 250* | 250 | 65 | 321,5 | 386,5 | 170 | 88,5 |
| 50/12F 280 | 280 | 72 | 323,5 | 395,5 | 170 | 88,5 |
| 50/18F 280 | 280 | 72 | 323,5 | 395,5 | 170 | 88,5 |
| 65/15F 340 | 340 | 80 | 330 | 410 | 170 | 92 |
| 80/15F 360 | 360 | 102 | 330 | 432 | 170 | 100 |

## Main flange dimensions

| DN | B3 | B4 | D1 | D2 | D5 | D6 |
|---|---|---|---|---|---|---|
| 32 | 32 | 78 | 61 | 122 | 90 | 100 |
| 40 | 40 | 83 | 63 | 126 | 100 | 110 |
| 50 | 50 | 95 | 70 | 140 | 110 | 125 |
| 65 | 65 | 118 | 70 | 140 | 130 | 145 |
| 80 | 80 | 130 | 100 | 192 | 160 | 200 |

* Compensation flanges included in versions with 250 mm installation length.

**PERFORMANCE CURVES | 1 OF 2**

# DN32 - DN50 performance

HS, CP and PP control curves and AUTO range. Q in m³/h; H in m.

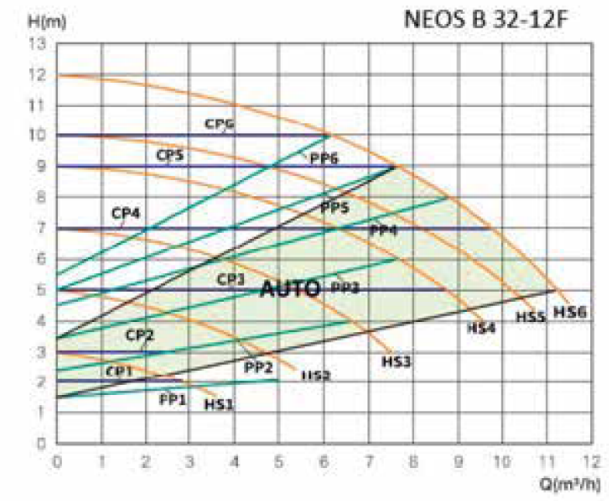


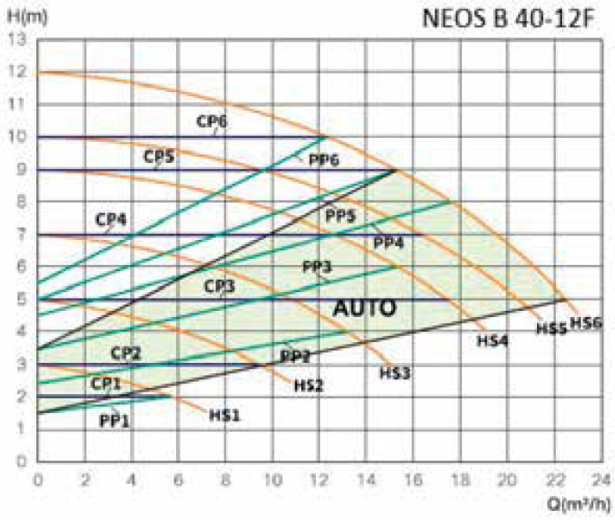


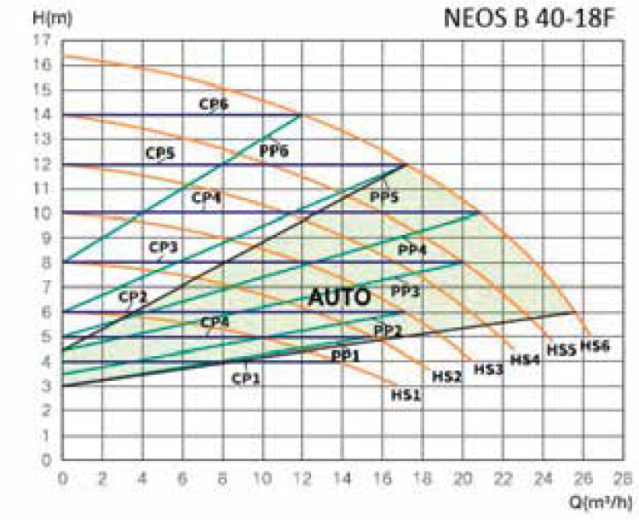


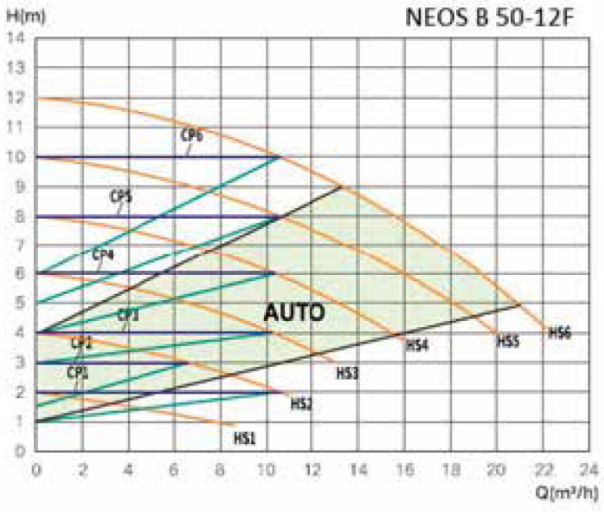


HS: constant speed • CP: constant pressure PP: proportional pressure • AUTO: automatic control

**PERFORMANCE CURVES | 2 OF 2**

# DN50 - DN80 performance

HS, CP and PP control curves and AUTO range. Q in m³/h; H in m.

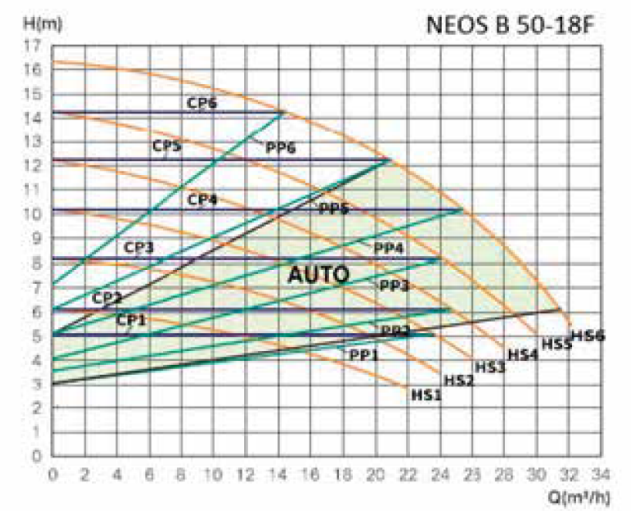


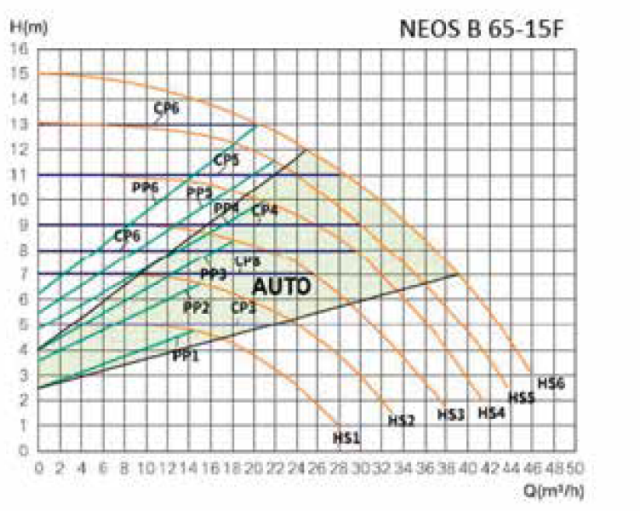


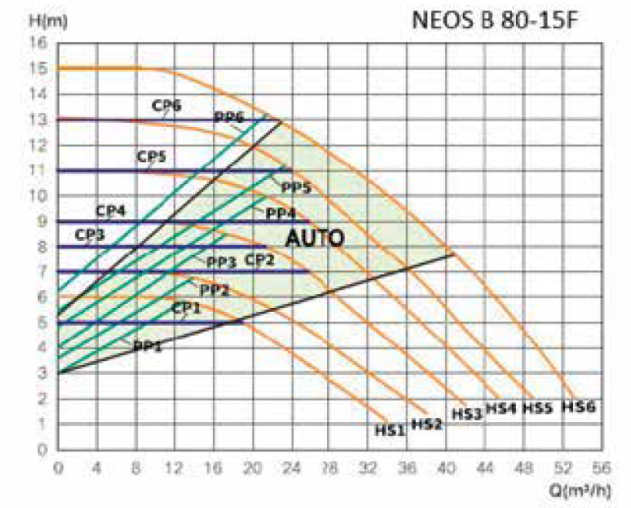


## Essential installation requirements

- Install with the motor shaft horizontal.
- Connect the PE protective conductor correctly.
- Do not run the circulator without water.
- Disconnect the power supply before any work.

For installation, PWM signal configuration and safety procedures, refer to the NEOS B operating manual.

**One Pump S.r.l. | Registered office: Via Tosarelli 67, 40055 CASTENASO (BO)**
Operating office: Via P. Matteucci 4, 40057 GRANAROLO DELL'EMILIA (BO)
Tel.: +39 051 19616352 | Fax.: +39 051 531129
info@onepump.it | www.onepump.it