OPERATION AND MAINTENANCE MANUAL

Mega 25-12/180

Installation, adjustment and service

Class A high-efficiency electronic circulator



Before installation

Read this manual carefully and keep it for future reference. Installation, connections and maintenance must be carried out by qualified personnel.

One Pump S.r.l. - Edition 30.09.2026 Model Mega25-12/180

REFERENCE

Contents

Contents	Page
Safety and warnings	3-4
Product, identification and technical data	5-6
Fluids and operating conditions	7
Installation, insulation and orientation	8-9
Installation dimensions	10
Electrical connections and PWM signal	11-12
Panel and control modes	13-14
Start-up, venting and stopping	15
PWM characteristics and control	16-18
Protection and fault indications	19-20
Troubleshooting	21-22
Maintenance and periods of inactivity	23
Performance and PWM curves	24-25
Materials and exploded view	26-27
Fittings and cables	28-30
Storage, disposal and service	31

Understanding the notices

Warning: risk of personal injury. Caution: risk of malfunction or product damage. Note: useful information for correct use.

1 | SAFETY

Installation and servicing

Qualified personnel

Installation, electrical connections and maintenance must be carried out by personnel familiar with these instructions and holding the required professional qualifications. Observe safety rules and local regulations.

Electrical supply

Before installing, moving, dismantling or servicing the pump, disconnect the power and prevent accidental reconnection. Always connect protective earth and do not alter it without authorisation.

Hot, pressurised liquid

Before moving or removing the pump, let the system cool and drain the liquid, or isolate both sides and release pressure from the section being serviced. The liquid can cause burns.

Isolating valves

Fit an inlet and an outlet valve to facilitate servicing. Before start-up, reopen the valves and ensure the pump is filled with liquid.

Protection of the installation location

Install the pump sheltered from rain, water spray and direct sunlight. Provide ventilation, especially at high ambient temperatures.

Cables and connectors

Do not pull the cables: they have no dedicated strain-relief structure. If the power cable is damaged, contact service for replacement of the cable and connector.

1 | SAFETY

Correct use and precautions

Avoid dry running

Do not start the pump without liquid or with an unpressurised system. Dry running causes wear and abnormal noise and may seriously damage the product.

Permitted liquids

Use water or a water/glycol mixture within the limits on page 7. The liquid must be clean, non-corrosive and non-explosive. Do not pump flammable fluids, mineral oils or liquids containing fibres.

Protection against frost and impact

Prevent freezing in the pump and pipework. If frost is possible while the system is stopped, drain the circuit. Do not strike the circulator with hard objects, and protect the system against water hammer.

Abnormal operation

If the motor overheats or its temperature is abnormal, disconnect power, close the outlet valve and contact your dealer or service. Do not continue using a faulty pump.

Children and people requiring assistance

Keep the product out of children's reach and protect it after installation. Children aged at least 8 and persons with reduced capabilities or no experience require supervision or instructions on safe use. Children must not play with the pump or clean or service it without supervision.

Limits of use

Use the product within the specified conditions. For other applications, contact One Pump in advance. Failure to follow these instructions can cause injury or damage to the pump and system.

2 | INTRODUCTION

Product and identification

Applications

Circulator for HVAC systems, boilers, heat pumps, mixed-water underfloor heating, and heating and cooling systems. Also intended for the hydronic circuit of heat-pump systems using R290 refrigerant.

Model identification

Mega25-12 identifies inlet and outlet ports with nominal diameter DN 25 and a maximum head of 12 m. The installation length is 180 mm.

Motor and control

Permanent-magnet synchronous motor, copper windings and neodymium-iron-boron magnets. Front-panel adjustment with constant-speed, proportional-pressure, constant-pressure, AUTO and external PWM control modes.

Product nameplate

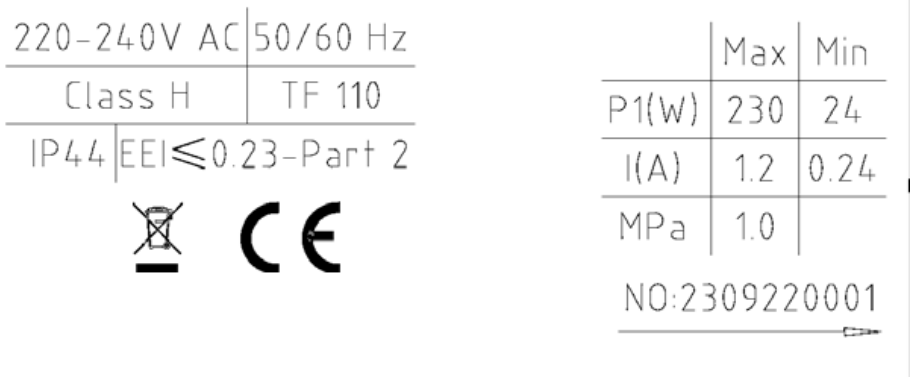

Before connection, compare the mains voltage and frequency with the nameplate. Keep the model and product number for service requests.

Energy efficiency: EEI ≤ 0,23 - Part 2. References stated in the data sheet: CE, GS, TÜV, electromagnetic compatibility, RoHS and REACH. RoHS 2.0 and REACH are third-party test reports.

2 | SPECIFICATIONS

Technical data

Parameter	Value
Maximum flow rate	6 m³/h
Maximum head	12 m
Rated duty point	5,5 m³/h at 7,5 m
Voltage / frequency	220-240 V CA / 50/60 Hz
Maximum / standby power	230 W / ≤ 4 W
Rated current	1,2 A
Cold inrush current	< 10 A for < 4 ms, at 20 ± 5 °C
Design pressure	1,0 MPa
Motor speed	1.000-4.900 rpm
Protection rating / insulation	IP44 / class H
Temperature class	TF110
Noise level	< 40 dB
Pump weight with cable	5 kg ± 5%
Cold DC resistance at 20 °C	8,6 Ω ± 5%

Operating conditions

Also observe the fluid, ambient and inlet-pressure limits on page 7.

3 | OPERATING CONDITIONS

Fluids, temperature and pressure

Fluid parameter	Limit
Permitted fluid	Water or water + glycol mixture ≤ 50%
Fluid temperature	From -20 °C to +110 °C
pH	6,5-8,5
Hardness	≤ 25 °dH
Solid impurities	Diameter and length ≤ 0,1 mm; volume ratio ≤ 0,1%

Operating environment

Temperature from -30 °C to +70 °C; humidity ≤ 95%; altitude < 1.000 m. Prevent freezing in the pump and pipework. Keep the shaft horizontal.

Minimum inlet pressure

Liquid temperature	< 75 °C	95 °C	110 °C
Inlet pressure	0,5 bar	1 bar	1,5 bar
Equivalent head	5 m	10 m	15 m

Maintain the required pressure to prevent cavitation and pump damage. Higher liquid viscosity reduces performance; take this into account during selection and adjustment.

Liquid and circuit cleanliness

Do not use fluids outside the specifications. Avoid fibres, mineral oils, corrosive, explosive or flammable liquids.

4 | INSTALLATION

Positioning the circulator

Follow the arrow on the hydraulic body for flow direction. Install the inlet and outlet connections using the fittings and isolating valves specified for the system.

Horizontal shaft

Keep the pump shaft horizontal. Permitted inclination is ± 5°. Arrange the circuit to prevent air collecting in the pump chamber.

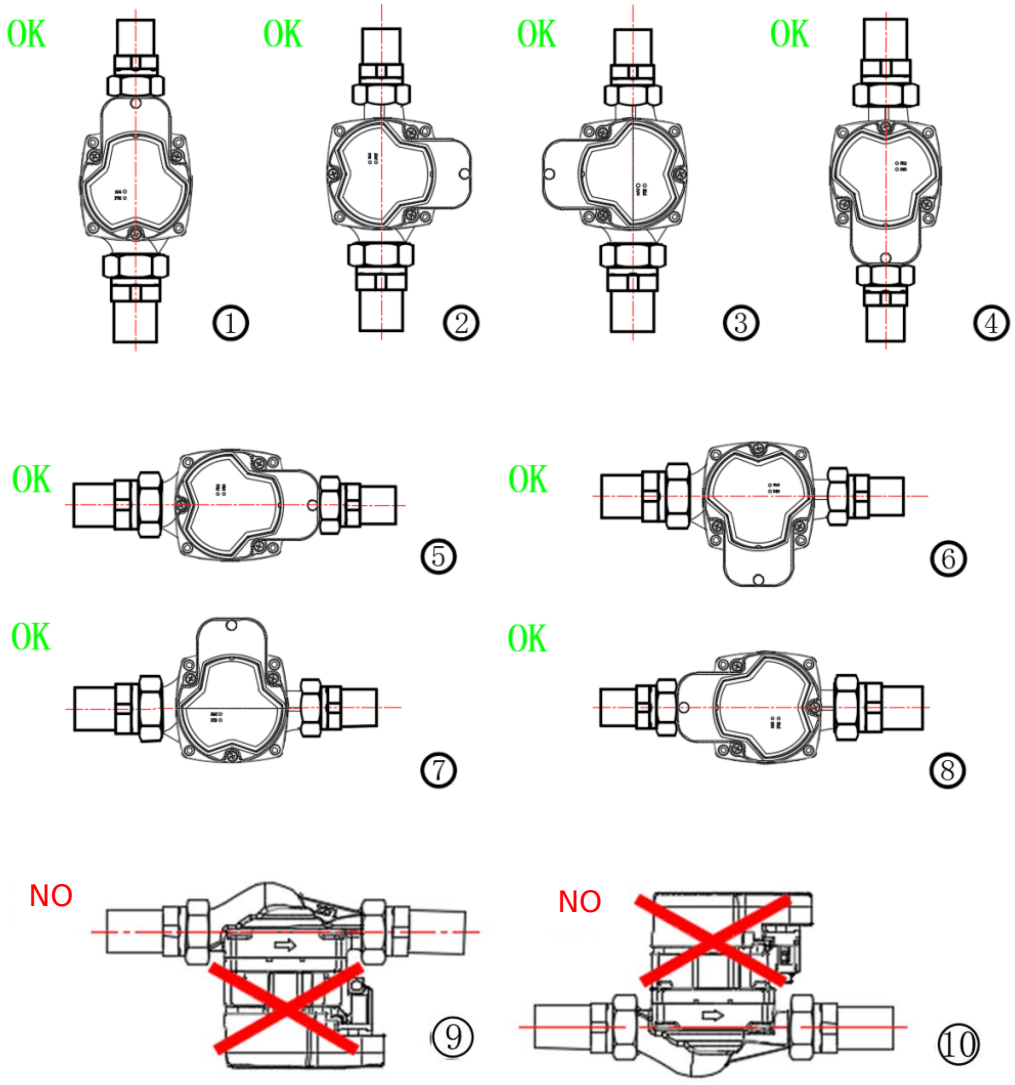

4 | INSTALLATION

Orientation and insulation

Motor-head orientation

Adjust the panel position only with the pump disconnected from power, the system cooled, and the circuit isolated and depressurised. Use one of the permitted positions on page 8.

1. Close the inlet and outlet valves.
2. Loosen and remove the four motor-head fixing screws.
3. Rotate the head to a permitted position, aligning the holes.
4. Refit the screws and tighten them in a crosswise sequence.
5. Reopen the valves, fill and vent the system before restarting.

Thermal insulation



The insulating cover on the pump body and pipe insulation reduce heat losses.

Keep controls and drains clear

Do not cover the electrical box, control panel or any drain holes.

4 | DIMENSIONS

Installation dimensions

Drawing dimensions are in millimetres.

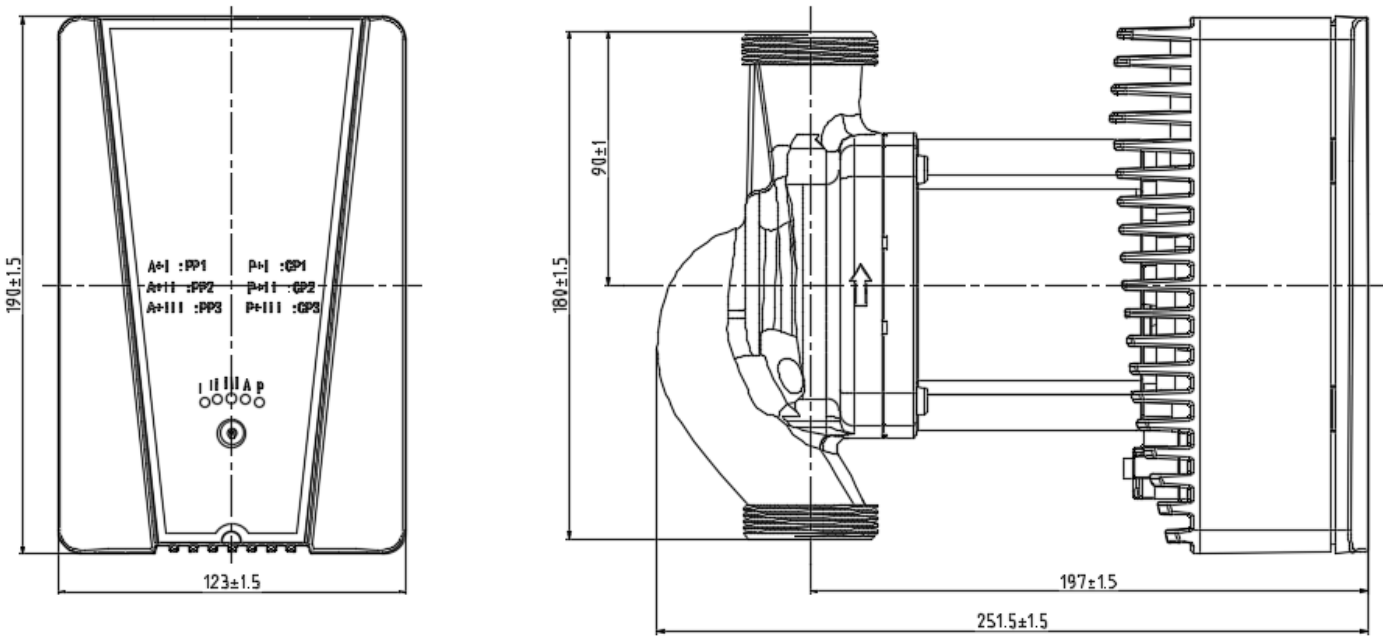

Main dimension	Dimension
Port centre distance	180 ± 1,5 mm
Front width	123 ± 1,5 mm
Front height	194 ± 1,5 mm
Overall longitudinal dimension	251,5 ± 1,5 mm
Indicated longitudinal dimension	197 ± 1,5 mm
Centre to upper connection	91 ± 1 mm

5 | ELECTRICAL CONNECTIONS

Power supply and earth

Power supply: 220-240 V AC, 50/60 Hz. Power cable: 3 × 0,5 mm².

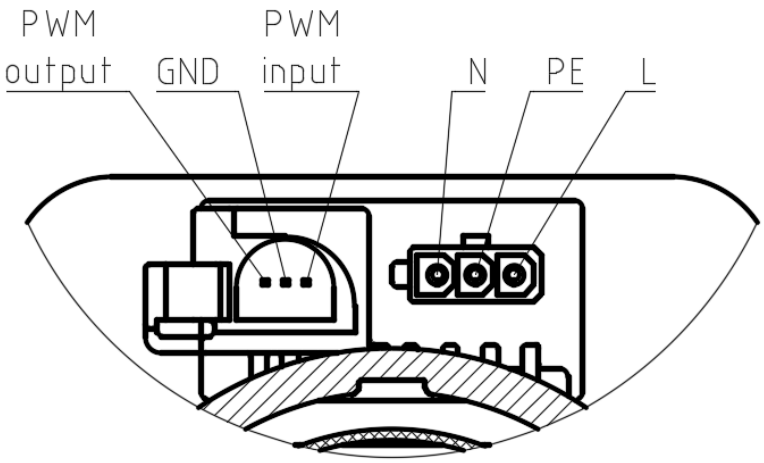

Code	Function	Wire colour
L	Line	Brown
N	Neutral	Blue
PE	Protective earth	Yellow-green

- Make connections with the pump disconnected from power and in accordance with local regulations.
- Connect the PE conductor reliably to protective earth.
- Use an external isolating device with a minimum contact gap of 3 mm.
- Check voltage, frequency and correct connector insertion before switching on.
- Do not pull on cables or alter the earthing.

5 | CONTROL SIGNAL

PWM connection

Wire	Function
Red	PWM IN - control input
Green	PWM OUT - feedback
Yellow	GND - signal reference

The PWM output is open-collector/drain: connect a pull-up resistor. A 5 V DC pull-up supply is recommended.

Signal reference

GND is the signal-circuit reference; the pump's protective earth connects to the PE terminal of the power connector.

PWM input circuit

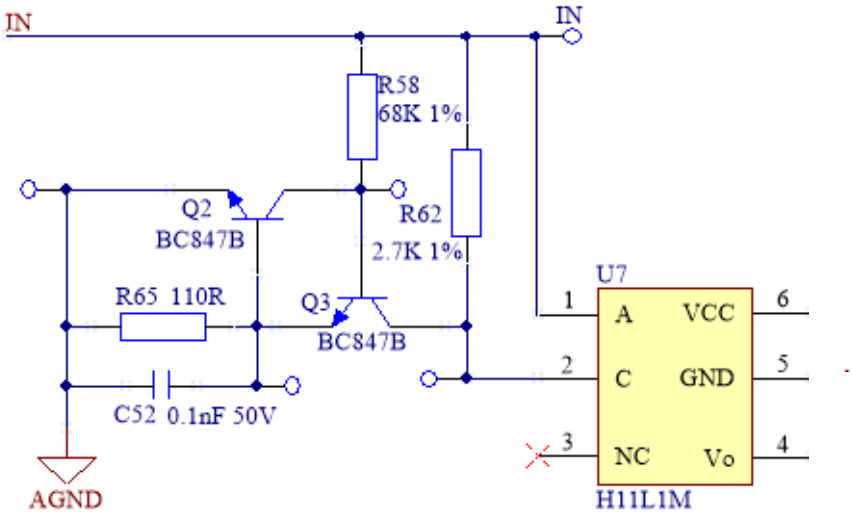

PWM output circuit

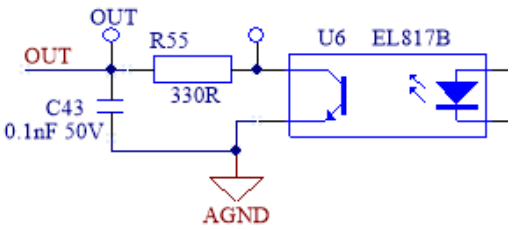

6 | CONTROL PANEL

Settings and LED indicators



The default mode at power-on is CS3. Press the button briefly once to switch to the next mode. The table shows the number of presses.

No.	Mode	Operation	LEDs on
0	**CS3**	Constant speed - high	○ ○ ● ○ ○
1	**AUTO**	Automatic adaptation	○ ○ ○ ● ○
2	**PP1**	Proportional pressure - low	● ○ ○ ● ○
3	**PP2**	Proportional pressure - medium	○ ● ○ ● ○
4	**PP3**	Proportional pressure - high	○ ○ ● ● ○
5	**CP1**	Constant pressure - low	● ○ ○ ○ ●
6	**CP2**	Constant pressure - medium	○ ● ○ ○ ●
7	**CP3**	Constant pressure - high	○ ○ ● ○ ●
8	**CS1**	Constant speed - low	● ○ ○ ○ ○
9	**CS2**	Constant speed - medium	○ ● ○ ○ ○
/	**P**	PWM control	○ ○ ○ ○ ●

LEDs on: I II III A P

6 | SYSTEM ADJUSTMENT

Operating mode

CS1 / CS2 / CS3 - Constant speed

Three speed levels: low, medium and high. The pump operates on the selected speed curve. CS3 is the default setting at power-on.

PP1 / PP2 / PP3 - Proportional pressure

Three control levels. Pressure decreases as flow demand decreases and increases as demand rises.

CP1 / CP2 / CP3 - Constant pressure

Three control levels. Pressure remains constant while flow adapts to system demand.

AUTO - Automatic adaptation

Control adapts operation to system demand. Mode curves are shown on page 24.

P - PWM control

External control regulates speed according to signal duty cycle. Connections, electrical values and thresholds are given on pages 12 and 16-18.

Systems with a bypass valve

The bypass between flow and return maintains minimum flow when system valves are closed. During adjustment, select minimum speed CS1 and ensure Q min according to the valve manufacturer's instructions. After adjustment, restore the mode required by the system.

7 | START-UP

Filling, venting and stopping

Before switching on

1. Check horizontal shaft installation and flow direction.
2. Check hydraulic connections and ensure the valves are open.
3. Fill the circuit and vent air before start-up.
4. Check the minimum inlet pressure specified on page 7.
5. Check the supply, earth and correct connector insertion.

Initial start-up and venting

Residual air in the pump can cause noise. Run the circulator briefly at high speed CS3 to help expel air, then select the required setting. If noise persists, refer to troubleshooting.

Line	Time / behaviour
Start after power-on	Maximum speed reached in less than 8 s
PWM start from stop or standby	90% of maximum speed within 8 s
Stop after power disconnection	Less than 1 s

Do not start without water

Fill and vent before commissioning. Electronic protection does not replace these operations.

8 | PWM CONTROL

Electrical characteristics

PWM (Pulse Width Modulation) control regulates speed through duty cycle. At a fixed frequency, control is inversely proportional: speed decreases as duty cycle increases.

Input parameter	Value
Current isolation in the pump	Yes
Frequency	100-4.000 Hz
High-level voltage	4,0-24 V
Low-level voltage	≤ 0,7 V
High-level current	Max 10 mA at 100 Ω
Duty cycle	0-100%
Polarity	Fixed
Rise and fall time	≤ T/1.000

Duty cycle

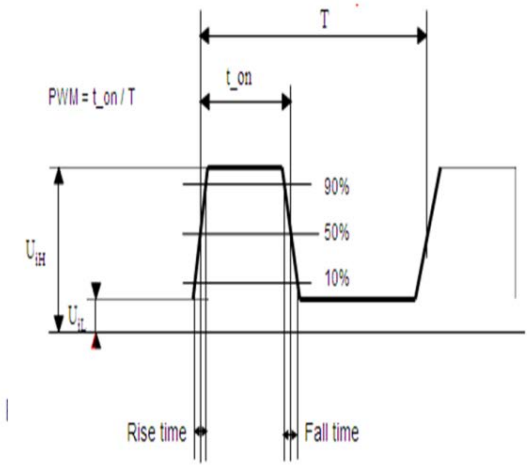

d = t_on / T
d% = 100 × t_on / T

T = signal period
t_on = high-level duration

8 | PWM CONTROL

PWM input signal

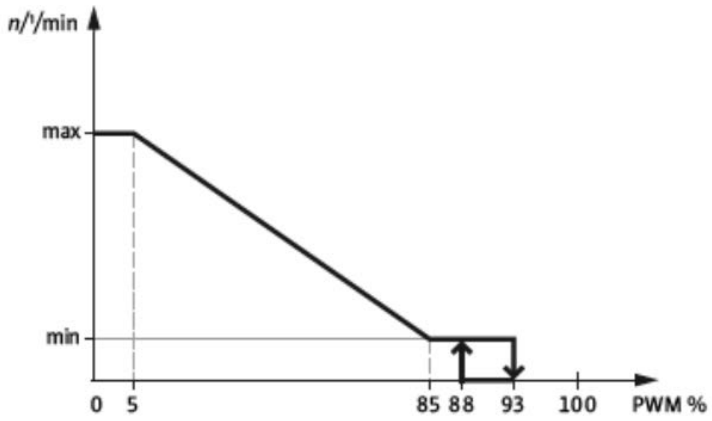

PWM input	Circulator status
0%	Non-PWM mode at maximum speed; no PWM signal.
≤ 5%	Maximum speed.
> 5% and ≤ 85%	Linear speed reduction from maximum to minimum.
> 85% and ≤ 88%	Minimum speed.
> 88% and < 93%	Hysteresis zone: prevents starting and stopping when the signal fluctuates near the switching point.
≥ 93% and ≤ 100%	Standby: the pump stops.
Detection accuracy	± 1 percentage point: with a 20% signal, detection ranges from 19% to 21%.

Maximum operation

With PWM below 5%: maximum speed, maximum input power 230 W and maximum head 12 m.

8 | STATUS SIGNAL

PWM feedback

Voltage amplitude: 5-32 V. Frequency: 75 ± 5% Hz.

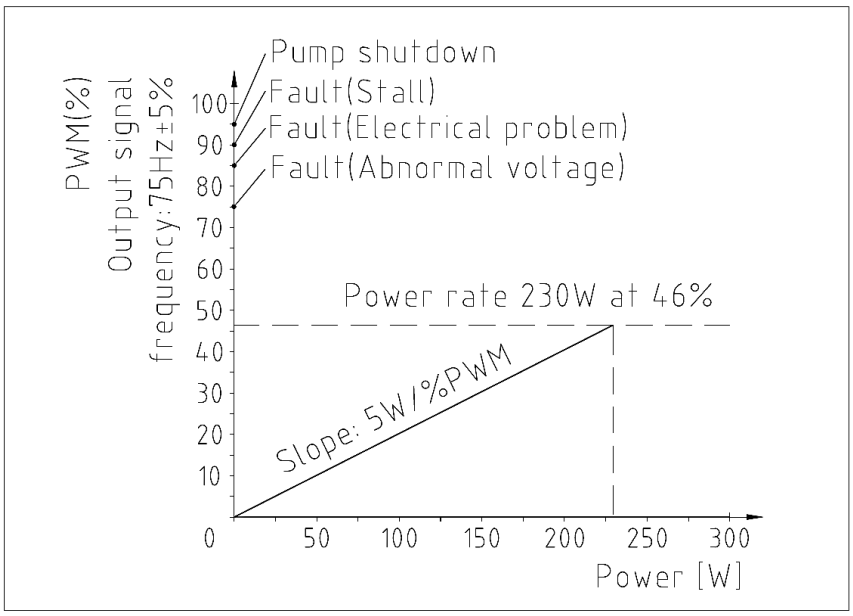

PWM OUT	Status and behaviour
0-46%	Indication of input power from 0 to 230 W.
75%	Abnormal voltage. Stops and resumes when voltage returns to the protection recovery value.
85%	Electrical problem: overcurrent, open phase, light load or overtemperature. Restart depends on the protection activated; see pages 19-20.
90%	Stall. Resumes once the fault is cleared; after 5 consecutive events, disconnect and reconnect power.
95%	Pump stopped.

The signal indicates operating status and consumption by comparing the set command with the circulator's feedback.

9 | DIAGNOSTICS

Electrical protection

The indicator lights flash simultaneously to identify the protection activated.

1 flash - Overvoltage

If voltage exceeds 285 ± 10 V, the pump stops after 2 s. Normal operation resumes when voltage returns to 270 ± 10 V.

2 flashes - Undervoltage

If voltage falls below 140 ± 10 V, the pump stops after 2 s. Normal operation resumes when voltage returns to 150 ± 10 V.

3 flashes - Overcurrent

If current is excessive at full load, the pump stops immediately and attempts to restart after 8 s. If the fault persists, the cycle repeats.

4 flashes - Open phase

If the motor has an open phase, the pump stops immediately and attempts to restart after 8 s. After 5 consecutive protection events, it no longer restarts and must be power-cycled.

Before troubleshooting

Disconnect power and prevent accidental reconnection. Correct the cause before reconnecting power and restarting.

9 | DIAGNOSTICS

Stall and thermal protection

5 flashes - Rotor stall

After 3 s of stall, the pump stops and attempts to restart after 8 s. After 5 consecutive events, it no longer restarts if the fault persists. Clear the problem and power-cycle the pump.

6 flashes - Light load

After 10 s of light-load operation, the pump stops and attempts to restart after 8 s. After 5 consecutive protection events, it no longer restarts and must be power-cycled.

7 flashes - Overtemperature

At rated voltage and frequency, with high ambient and water temperatures, the pump stops when the IPM module surface exceeds 102 ± 10% °C. Below 99 ± 10% °C, it operates at reduced power, 0,5 times rated power.

Overheating limitation

At rated voltage and frequency, with high ambient and water temperatures, above 98 ± 10% °C at the IPM module surface, the pump runs at 0,5 times rated power. Below 93 ± 10% °C, normal operation resumes.

Do not keep attempting restarts

If protection keeps activating, disconnect power and contact service. Do not work inside the pump while it is powered.

10 | TROUBLESHOOTING

Failure to start and pressure

Work for qualified personnel only

Disconnect power before checks. If the circuit must be opened, allow cooling, isolate and depressurise the affected section.

Pump does not start

Possible cause	Action
Power disconnected or abnormal voltage	Check the supply connection and voltage.
Equipment fuse blown	Replace the fuse.
Switch or circuit breaker open	Check and reset the device.
Voltage too low or too high	Check that voltage is within the specified range.
Pump blocked by impurities	Remove impurities.
Pump malfunction	Replace the pump.

Pump running without useful pressure

Check	Action
Circuit filling and valve opening	Add water or open the valves as required.
Air in pump or pipework	Vent and run the pump for a short period.

10 | TROUBLESHOOTING

Noise, flow and control

Noise in the pump

Possible cause	Action
Air in the pump	Expel air from the system.
Friction caused by impurities	Clean the pump.
Wear or friction of internal components	Replace the pump.
Cavitation	Reduce outlet valve opening or increase inlet pressure; observe the values on page 7.

Insufficient flow

Possible cause	Action
Performance unsuitable for the system	Select a pump with suitable performance.
Pipework or filter blocked	Clean pipework and filter.

Pump does not respond to control

Possible cause	Action
No signal or faulty connection	Check the PWM cable; reconnect or replace it. Check the connection on page 12.

If the fault persists, disconnect power and contact service.

11 | MAINTENANCE

Checks and inactivity

Before servicing

Disconnect power and prevent accidental reconnection. Let the liquid cool. Before opening the circuit, isolate the pump and release pressure from the affected section.

Checks during operation

Check for leaks, abnormal noise and protection indications. Ensure cables and connectors are intact, the panel remains accessible and any drains are unobstructed.

Cleaning and impurities

If impurities are present or flow is reduced, clean filters and pipework. Work inside the pump must be performed by qualified personnel, with power disconnected and the circuit made safe.

Scale protection

Observe fluid requirements and limit top-ups that increase water hardness. The data sheet specifies Sentinel X100 for scale treatment; use it according to its instructions.

Prolonged inactivity and frost

Close the inlet and outlet valves and disconnect power. If the system is stopped and freezing is possible, drain the liquid to prevent pump-body damage.

Returning to service

Before restarting, check connections, reopen valves, fill and vent the circuit, and check inlet pressure. Repeat the start-up sequence on page 15.

12 | PERFORMANCE

Control-mode curves

Curves are for clean water at ambient temperature. A different fluid may reduce performance; consider its properties when selecting the pump.

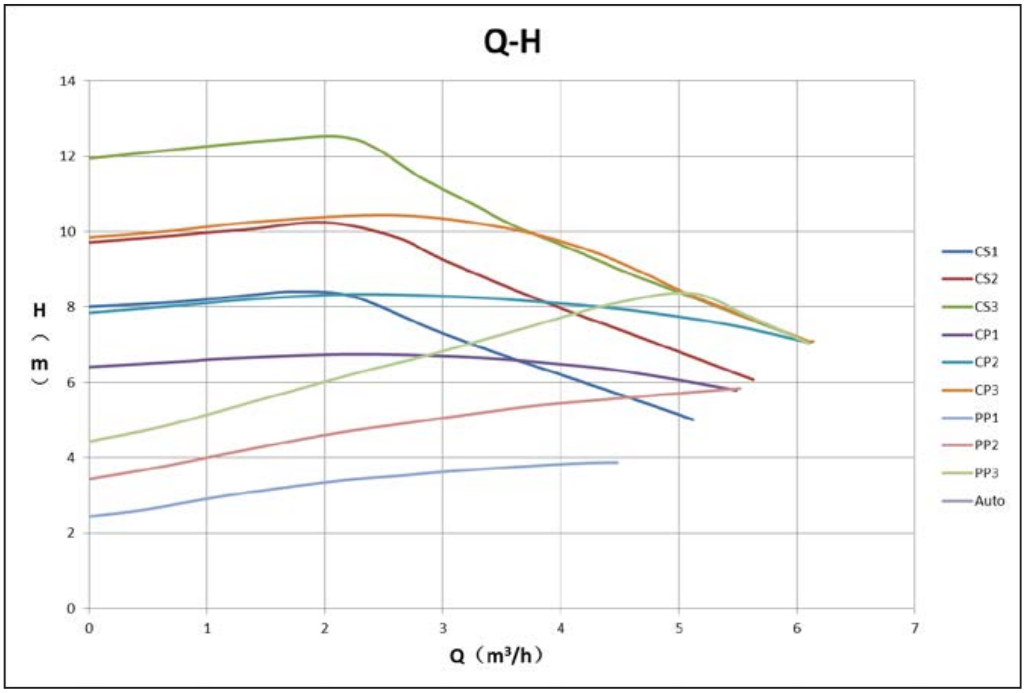

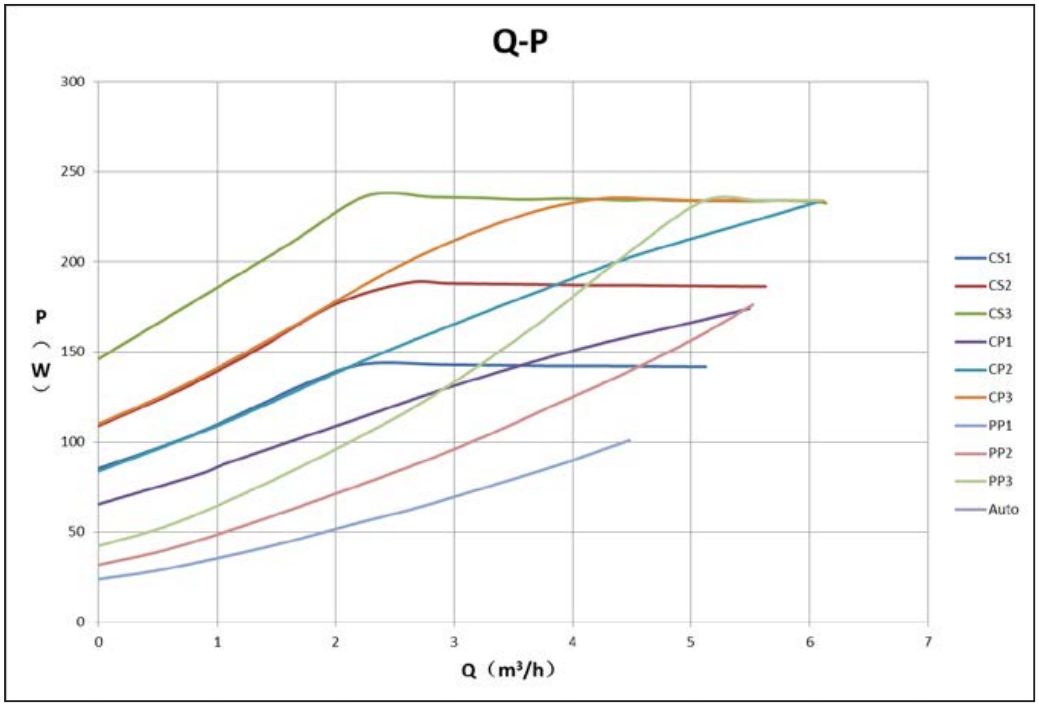

12 | PERFORMANCE

PWM mode curves

Curves for different PWM duty cycles, shown for reference.

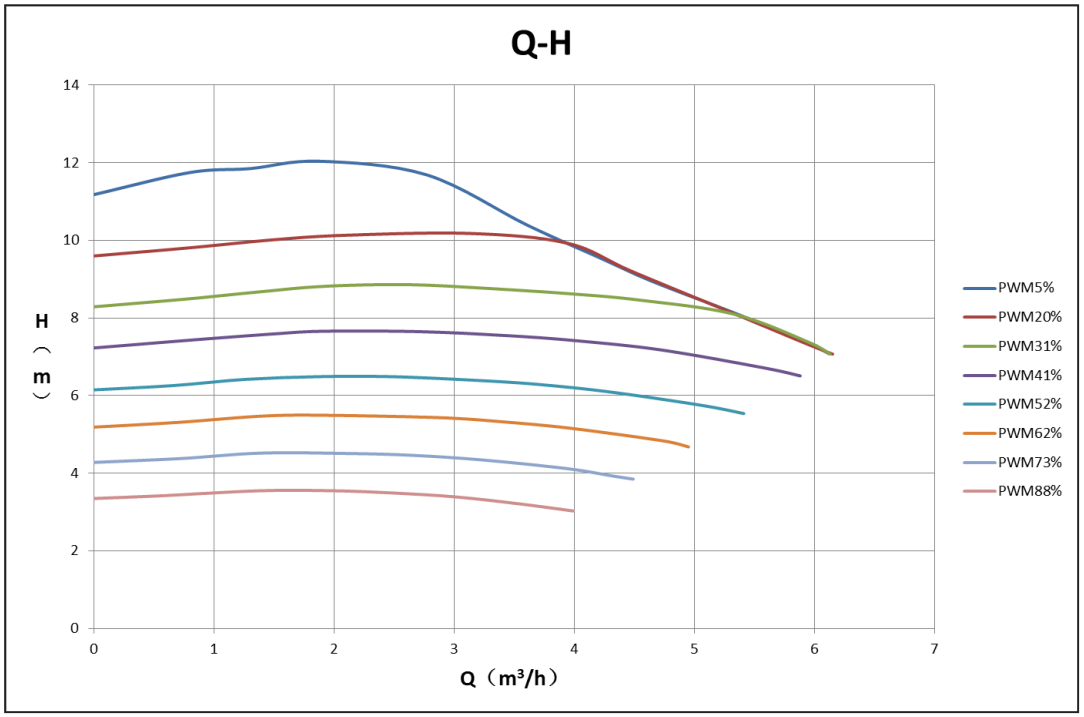

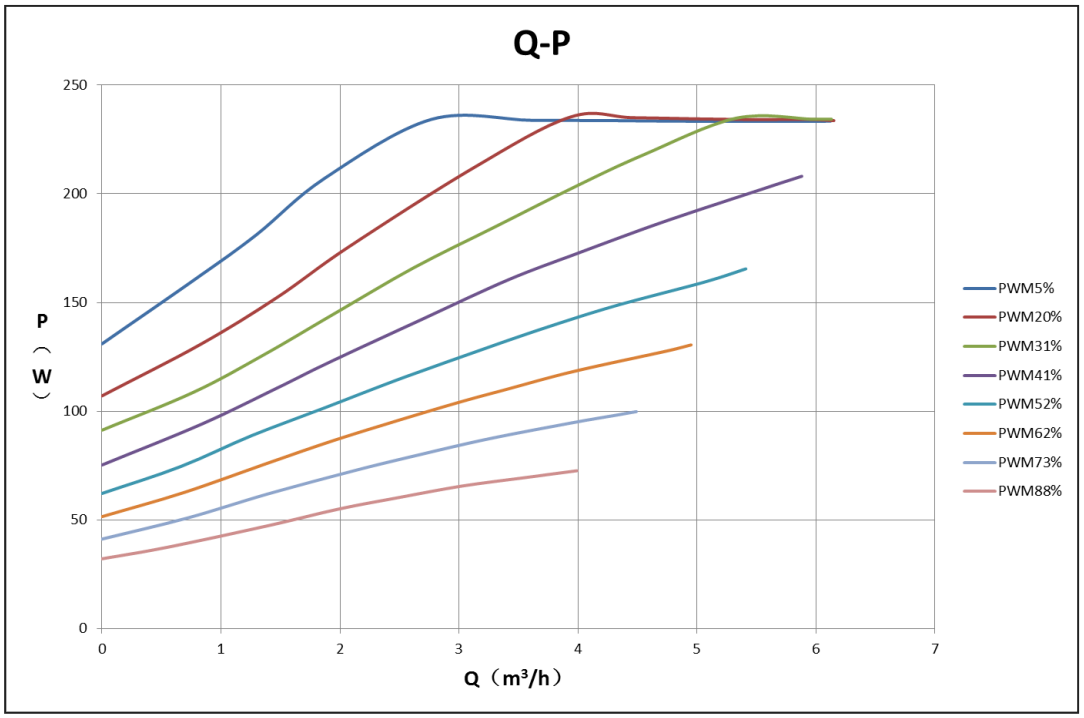

13 | CONSTRUCTION

Section view and materials

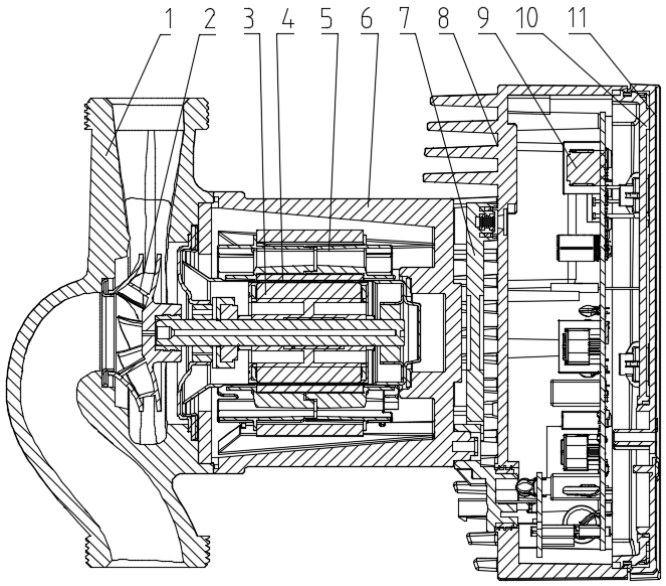

No.	Component	Material
1	Pump body	Cast iron
2	Impeller	Composite material
3	Rotor assembly	Assembly
4	Shielding sleeve assembly	SUS304
5	Stator assembly	Assembly
6	Motor base	Aluminium alloy
7	Adapter plate	Assembly
8	Terminal box base	Composite material
9	Drive	Assembly
10	Box lid	Composite material
11	Display panel (Mylar)	PC

13 | COMPONENTS

Circulator exploded view

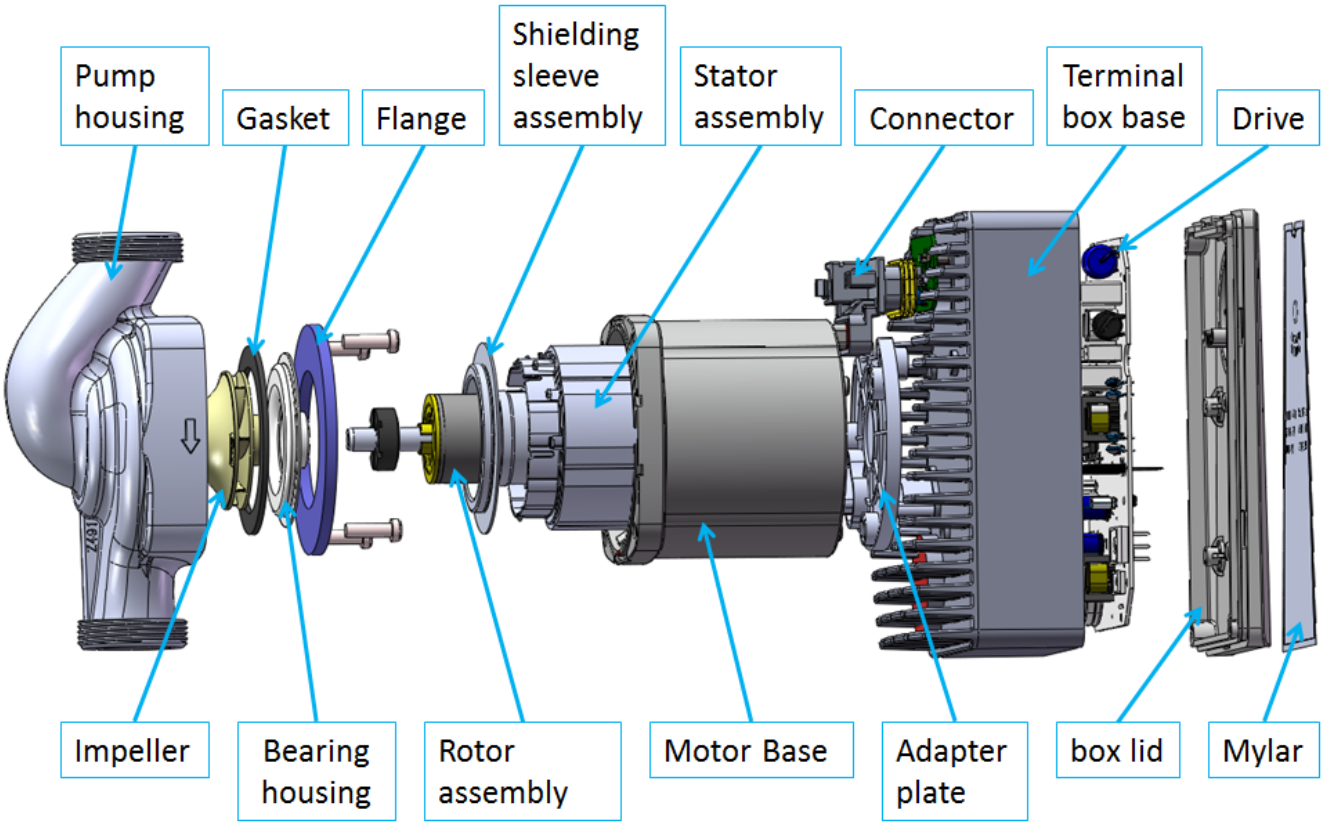

Drawing-label key

Indication	Component
Pump housing / Impeller	Pump housing / Impeller
Gasket / Flange	Gasket / Flange
Bearing housing / Rotor assembly	Bearing housing / Rotor assembly
Shielding sleeve assembly	Shielding sleeve assembly
Stator assembly / Motor Base	Stator assembly / Motor base
Connector / Terminal box base	Connector / Terminal box base
Drive / Adapter plate	Drive / Adapter plate
Box lid / Mylar	Box lid / Display panel

14 | HYDRAULIC ACCESSORIES

Connection fittings

G 1½" / G 1" fitting. Drawing dimensions in millimetres.

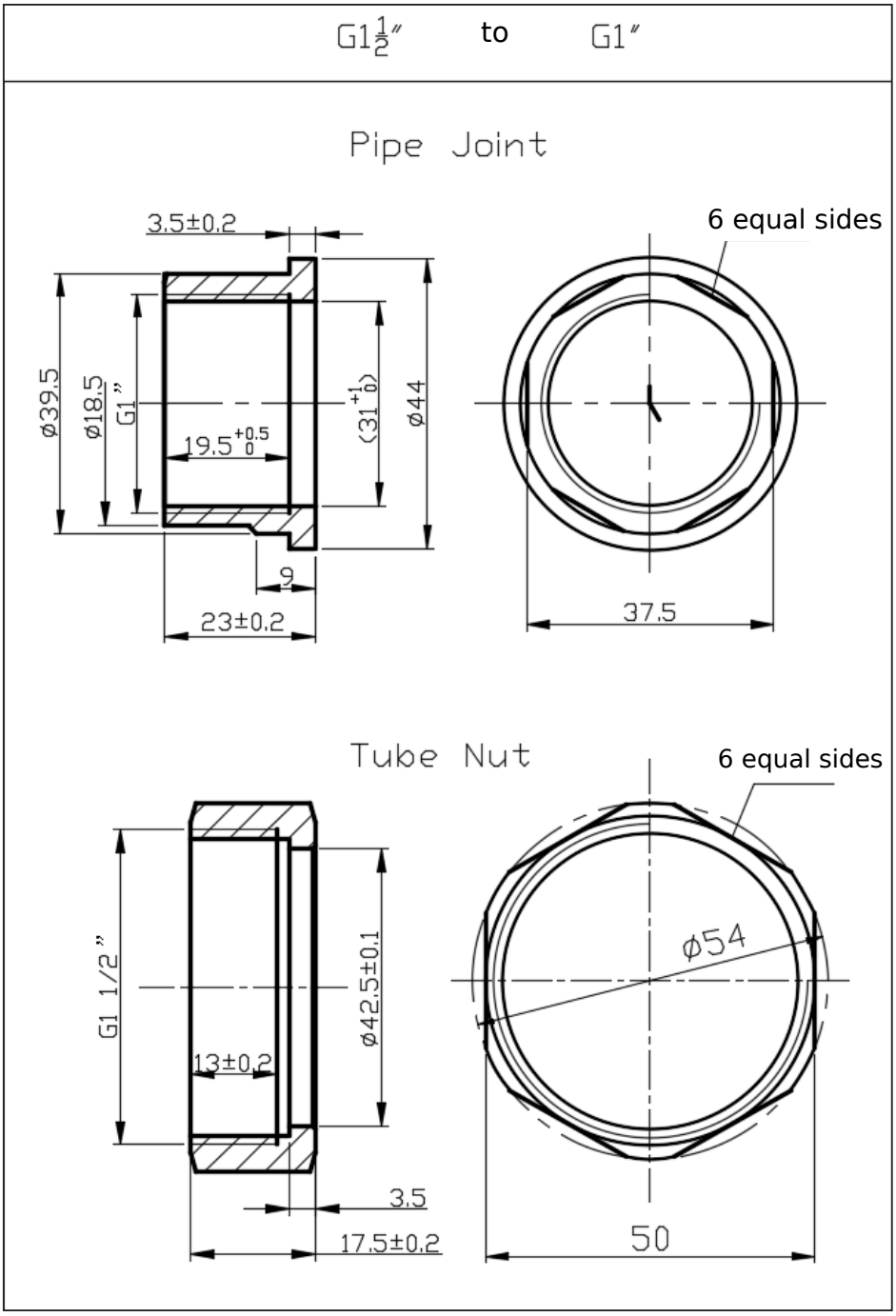

Pipe Joint: pipe fitting. Tube Nut: union nut.

14 | ELECTRICAL ACCESSORIES

Power supply cable

Angled Molex connector. Dimensions L1, L2 and L3 in millimetres.

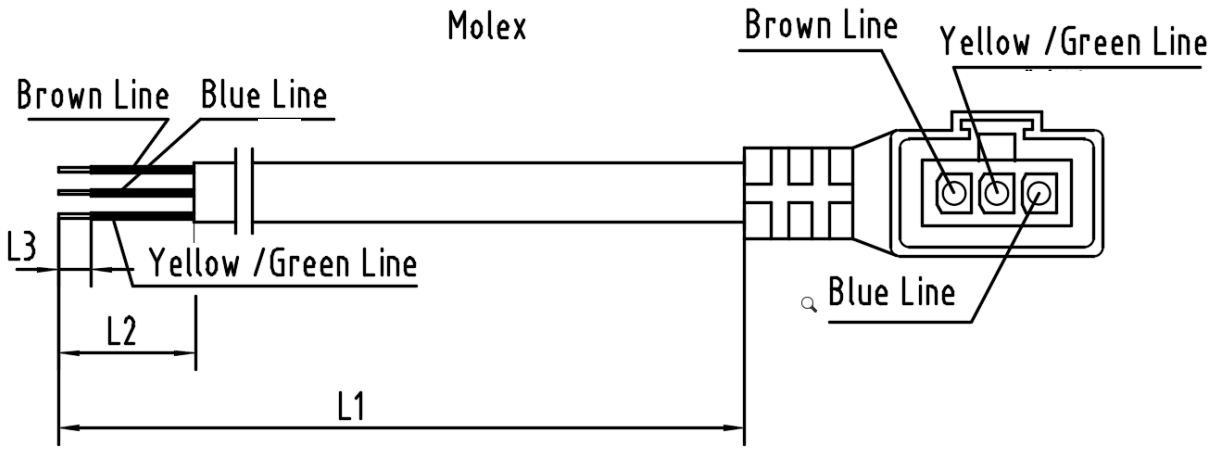

Wire	Function
Brown	Live L
Blue	Neutral N
Yellow-green	Protective earth PE

Cable configurations

Cross-section (mm²)	L1 (mm)	L2 (mm)	L3 (mm)
0,5	600	30	10
0,5	1.000	30	10
0,5	1.500	30	10
0,5	2.000	30	10
0,75	1.500	30	10

14 | SIGNAL ACCESSORIES

PWM cable

Straight Molex connector. Dimensions L1, L2 and L3 in millimetres.

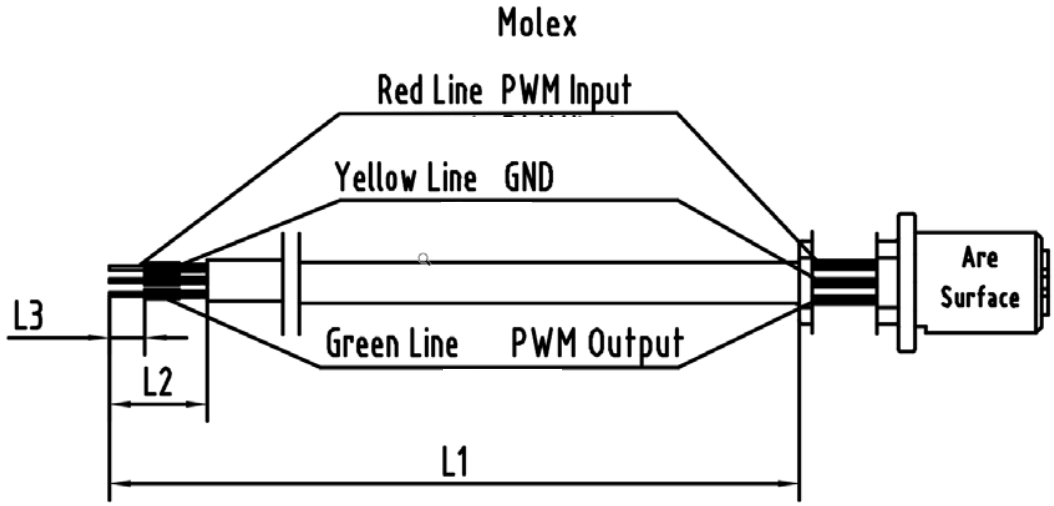

Wire	Function
Red	PWM IN - input
Yellow	GND - reference
Green	PWM OUT - feedback

Cable configurations

Cross-section (mm²)	L1 (mm)	L2 (mm)	L3 (mm)
0,5	400	10	4
0,5	1.000	10	4
0,5	1.250	35	6
0,5	1.300	10	4
0,5	2.000	20	5

15 | STORAGE AND END OF LIFE

Service and disposal

Storage and handling

Store the circulator in a dry, ventilated place protected from impact. Storage temperature -30 °C to +70 °C; humidity ≤ 95%. Prevent residual liquid in the pump or pipework from freezing. Do not lift or drag the product by its cables.

Product disposal

Do not dispose of the circulator with unsorted municipal waste. Use separate collection systems and contact local authorities for available services. Improper disposal may release hazardous substances into water and the food chain.

Replacement and take-back

When replacing the unit with a new one, ask the dealer to take back the old product for proper disposal.

Requesting service

Provide the model, nameplate number, fault description and number of indicator flashes. If the fault cannot be cleared by following the instructions, leave the pump disconnected from power and contact the dealer or One Pump.

One Pump S.r.l.

Tel. +39 051 19616352 - Fax +39 051 531129 | info@onepump.it | www.onepump.it

Registered office: Via Tosarelli 67, 40055 CASTENASO (BO)
Operating office: Via P. Matteucci 4, 40057 GRANAROLO DELL’EMILIA (BO)
P.IVA 03999511201