INSTALLATION AND OPERATING MANUAL

NEOS B

Variable-speed circulator



Installation and operating instructions

Thank you for choosing a One Pump NEOS B series circulator. This manual covers installation and commissioning, parameter settings, fault diagnosis, troubleshooting and routine maintenance.

Read carefully before installation.
Keep this manual for reference during operation and servicing of the circulator.

One Pump S.r.l. | Registered office: Via Tosarelli 67, 40055 CASTENASO (BO)
Operating office: Via P. Matteucci 4, 40057 GRANAROLO DELL'EMILIA (BO)
Tel.: +39 051 19616352 | Fax.: +39 051 531129
info@onepump.it | www.onepump.it

Edition 28.10.2026

PRELIMINARY INFORMATION

Safety and contents

Safety warnings

1. Do not connect or disconnect the cable or touch the socket contacts while the cable is live: risk of electric shock.

2. Do not connect the circulator to 380 V AC: this would cause severe, irreparable damage.

3. Use the circulator power cable and connect the PE protective conductor securely.

4. Follow the manual instructions strictly. One Pump accepts no liability for equipment damage or personal injury caused by failure to follow the instructions.

5. Do not dismantle the circulator for repairs. If a fault occurs, contact One Pump service.

One Pump service: +39 051 19616352

Contents

Section	Page
Applications and technical data	3
Dimensions and control panel	4-5
Modes, temperature and night function	6-7
PWM control: GT and ST logic	8-9
Wi-Fi and Smart Life app	10
Protection and installation	11
Startup and maintenance	12
Model performance curves	13-21

1 | PRODUCT OVERVIEW

Applications and technical data

1.1 Applications

Canned-rotor circulator with a permanent-magnet synchronous motor and electronic variable-speed control. For hot and cold water circulation: variable-flow heating, dual-supply underfloor heating, air conditioning, industrial circuits and domestic hot water recirculation.

1.2 Main technical parameters

Parameter	Value
Voltage tolerance	From -10% to +10% of the nameplate voltage
Frequency	50/60 Hz
Ambient temperature	From -35 °C to +55 °C
Pumped liquids	Heating and cooling water in accordance with VDI 2035 and UNI 8065; maximum water/glycol mixture ratio 1:1
pH and water quality	Check pH when filling and during maintenance, in accordance with VDI 2035 and UNI 8065 and the treatment used, ensuring compatibility with the system materials
Liquid temperature	From +2 °C to +110 °C
Maximum system pressure	1,0 MPa (10 bar)

1.3 Performance parameters

NEOS B model	Max power (W)	Max head (m)	Max flow rate / Q-H point	Installation length (mm)
32/12	400	12	12 m³/h	220
40/12	600	12	22 m³/h	220
40/15	800	15	24 m³/h	220
40/18	900	18	24 m³/h	220
50/12	560	12	26 m³/h	280
50/15	1000	15	32 m³/h	280
50/18	1000	18	32 m³/h	280
65/15	1300	15	48 m³/h	340
80/15	1300	15	52 m³/h	360

1 | INSTALLATION DIMENSIONS

Dimensions

1.4 Installation dimensions - dimensions in mm.

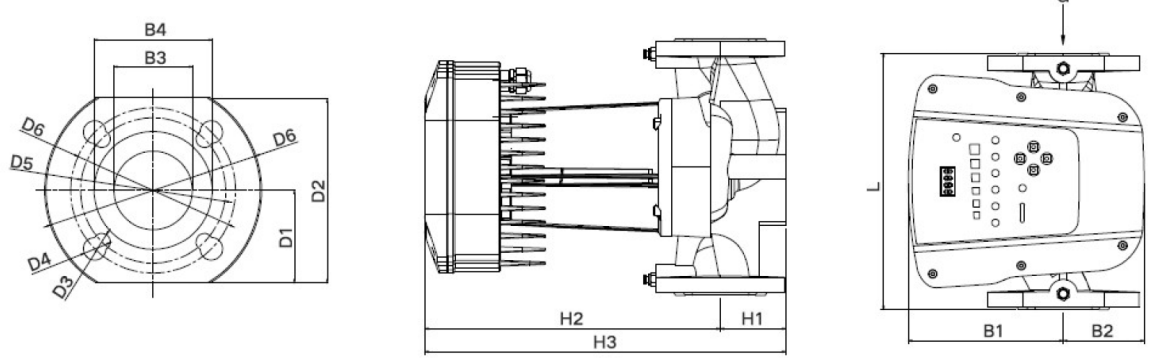

NEOS B model	H1	H2	H3	L	B1	B2
32/12	65	321,5	386,5	220	170	88,5
40/12	65	321,5	386,5	220	170	88,5
40/15	65	321,5	386,5	220	170	88,5
40/18	65	321,5	386,5	220	170	88,5
50/12	72	323,5	395,5	280	170	88,5
50/15	72	323,5	395,5	280	170	88,5
50/18	72	323,5	395,5	280	170	88,5
65/15	80	330	410	340	170	92
80/15	102	330	432	360	170	100

Flange dimensions by model group

Models	B3	B4	D1	D2	D4	D5	D6	G
32/12	32	78	61	122	19	90	100	DN32
40/12 - 40/15 - 40/18	40	83	63	126	19	100	110	DN40
50/12 - 50/15 - 50/18	50	95	70	140	19	110	125	DN50
65/15	65	156	70	140	19	130	145	DN65
80/15	80	130	100	192	18	160	200	DN80

Dimension D3: 14 mm for the DN32, DN40, DN50 and DN65 groups.

Connection flanges: DN32 to 1 1/4″; DN40 to 1 1/2″; DN50 to 2″; DN65 to 2 1/2″; DN80 to 3″.

2 | PRODUCT CONFIGURATION

Control panel

2.1 Panel layout and identification of controls.

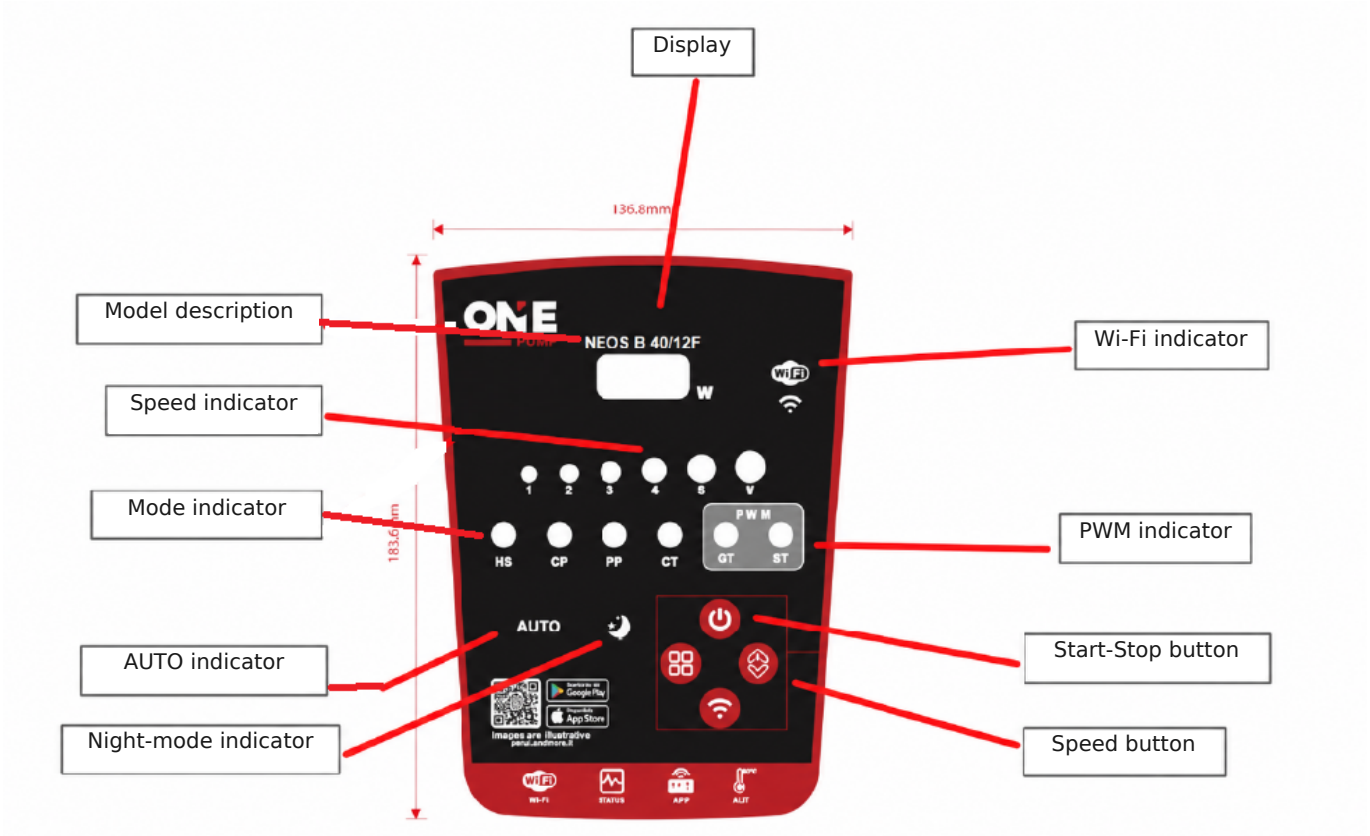

Indicators numbered 1-6 identify the selected level; in CT mode they correspond to the temperatures shown on page 7.

2.2 Controls and display

Panel control	Function
Mode - four squares	Changes the operating mode: HS, PP, AUTO, CP and CT.
Two arrows - right-hand button	Selects the level. In HS, PP and CP it changes the control level; in CT it sets the temperature.
Start-Stop - power symbol	Starts or stops the circulator.
Wi-Fi - network symbol	Manages the Wi-Fi connection; see page 10 for setup.

The panel combines the display, indicator lights and controls. Mode is the button with four squares; the level button has two arrows and is to its right.

2 | CONTROL

Modes and indicators

2.2 Indicator lights

Mode	Levels / function	Indicators lit
AUTO	Automatic control	AUTO
HS	Constant speed - levels 1-6	HS + 1, 2, 3, 4, 5 or 6
PP	Proportional pressure - levels 1-6	PP + 1, 2, 3, 4, 5 or 6
CP	Constant pressure - levels 1-6	CP + 1, 2, 3, 4, 5 or 6
CT	Temperature control - levels 1-6	CT + 1, 2, 3, 4, 5 or 6
PWM GT	PWM control with GT logic	GTPWM
PWM ST	PWM control with ST logic	STPWM
Night	Night operation	Night indicator
Wi-Fi	Wi-Fi connection	Wi-Fi indicator

2.3 Selecting mode and level

Press Mode (four squares) to cycle through: constant speed (HS), proportional pressure (PP), AUTO, constant pressure (CP) and temperature control (CT).

In HS, PP and CP modes, press the right-hand button with two arrows to change the level. Each mode has 6 settings.

In CT, the same button selects the temperature level; the procedure and setpoints are on page 7.

Control principle

AUTO	Adapts operation to the actual system characteristics.
HS	Maintains the selected rotational speed.
PP	Head increases linearly as flow rate increases.
CP	Head remains constant as flow rate varies.
CT	Adjusts operation according to the measured temperature and selected setpoint.

2 | CONTROL FUNCTIONS

Temperature and night mode

CT temperature control - single NEOS B

To set the temperature on a single NEOS B, select CT mode and then the level corresponding to the required temperature.

1. Press Mode (four squares) until the CT temperature-control indicator lights up.

2. Press the right-hand button with two arrows to move to the next level.

3. Select the numbered indicator according to the table.

Numbered indicator lit together with CT	Set temperature
1	10 °C
2	20 °C
3	30 °C
4	40 °C
5	60 °C
6	80 °C

Examples: for 40 °C, CT and 4 must be lit. For 60 °C, the indicators are CT and 5.

When the pump-body temperature is below the set value, the circulator speeds up; when it is above it, the circulator slows down to maintain the setpoint.

Night mode

In AUTO, PP, CP and CT modes, hold Mode (four squares) to activate night operation.

Period	Rated power
First hour	100%
Second hour	85%
Third, fourth and seventh hours	60%
After seven hours	Exits night mode

2 | EXTERNAL CONTROL

PWM signal - GT logic

2.4 PWM signal control. The circulator adjusts speed according to the input signal duty cycle and the selected logic.

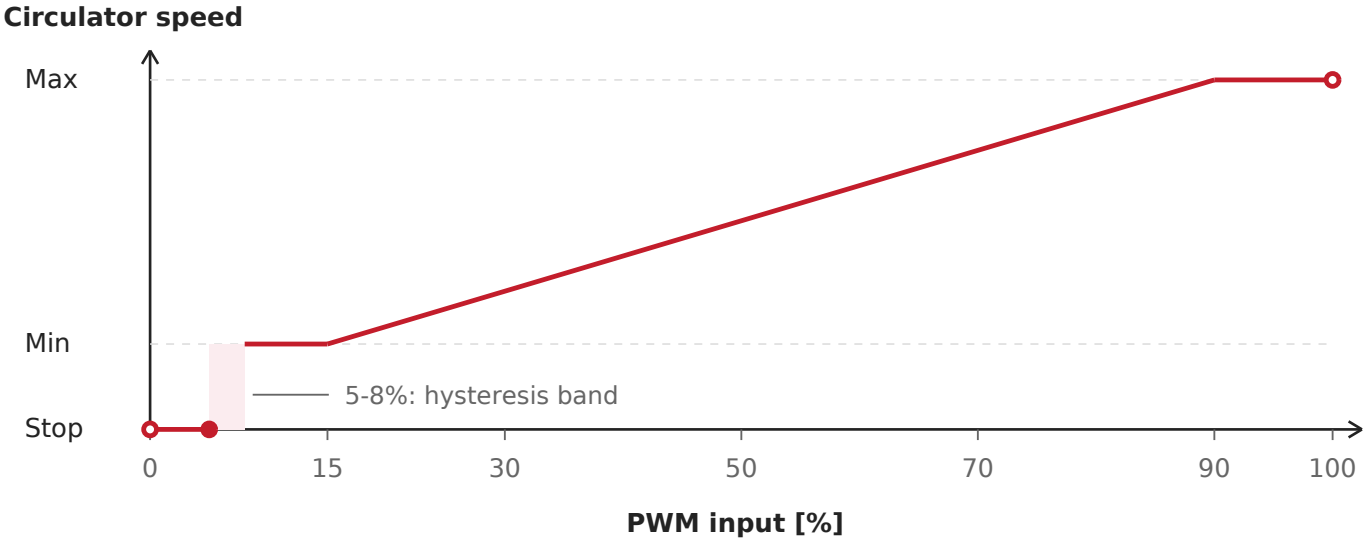

GT logic diagram showing relative speed. The conditions at 0% and 100% and the switching thresholds are listed in the table.

PWM input signal (%)	Circulator condition
0	Exits PWM mode.
≤ 5	Standby: the circulator is stopped.
> 5 / ≤ 8	Hysteresis band: prevents repeated starts and stops when the signal fluctuates around the switching point.
> 8 / ≤ 15	Runs at minimum speed.
> 15 / ≤ 90	Speed increases linearly from minimum to maximum.
> 90 / < 100	Runs at maximum speed.
100	Exits PWM mode.

2 | EXTERNAL CONTROL

PWM signal - ST logic

2.4 PWM signal control. The circulator adjusts speed according to the input signal duty cycle and the selected logic.

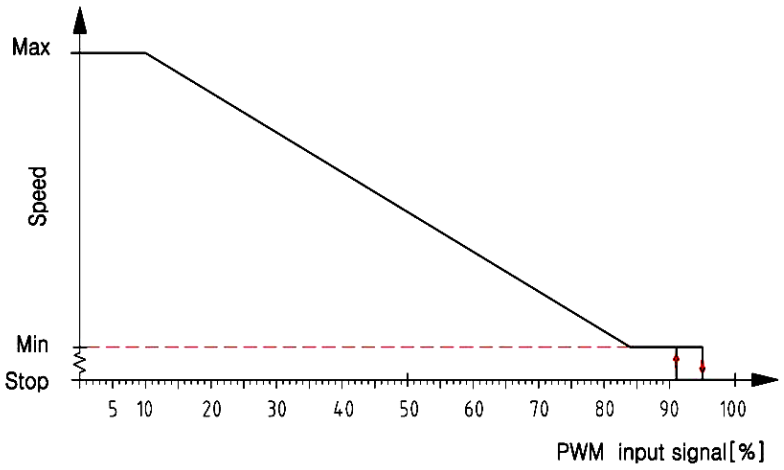

PWM input signal (%)	Circulator condition
0	Returns to normal, non-PWM operation: the system treats the PWM input signal as absent.
≤ 10	Runs at maximum speed.
> 10 / ≤ 84	Speed decreases linearly from maximum to minimum.
> 84 / ≤ 91	Runs at minimum speed.
> 91 / ≤ 95	Hysteresis band: prevents repeated starts and stops when the signal fluctuates around the switching point.
> 95 / < 100	Standby: the circulator is stopped.
100	Exits PWM mode.

Memory after a power interruption: in manual mode, the circulator resumes the mode set before power-off. GTPWM and STPWM logic are not stored: after restart, PWM control returns to the default GT logic.

2 | REMOTE CONNECTION

Wi-Fi and Smart Life app

2.5 Setting up and using the Wi-Fi connection.

Download Smart Life to your smartphone before connecting. The QR code provides access to the international app download.

Connection

1. Briefly press Wi-Fi. The indicator flashes, then flashes faster during connection; it stays on once connected.

2. While it flashes, open Smart Life and select "Add Device", or tap "+" and then "Add Device".

3. Wait for the circulator to be detected, add it and enter the Wi-Fi network details.

Use and control limitations

• App functions match the panel functions. If a fault occurs, Wi-Fi interface controls remain disabled until the fault is cleared.

• In AUTO mode, level selection is disabled.

• In CN mode, the night function is unavailable.

• When PWM control is active, mode and level controls are disabled.

Wi-Fi reset

The system retains pairing with the connected app. To connect to another mobile app, hold Wi-Fi. F1 on the display confirms the reset.

3 | PROTECTION AND INSTALLATION

Fault codes and installation

2.6 Protection and fault indications

Display code	Protection
P1	Protection program
P2	Low voltage
P3	Overcurrent
P4	Light load
P5	Rotor blocked
P7	Phase fault
P8	Overtemperature

3.1 Installation

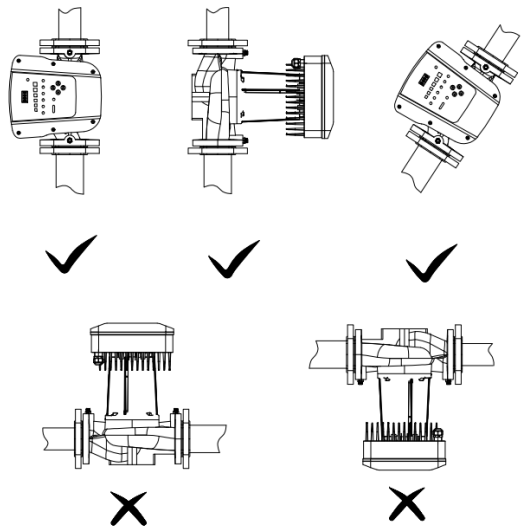

3.2 Precautions

• Threaded inlet and outlet connections must match the pipe diameter and be securely connected.

• Install the circulator with the motor shaft horizontal. Connect the PE protective earth conductor securely .

4 | OPERATION AND SERVICE

Startup and maintenance

3.3 Commissioning

1. Commission the circulator after mechanical installation and inspection of the power connections.

2. Before startup, close the outlet valve and open the inlet valve.

3. Supply power through the specified cable. Check that the panel lights up and the motor starts.

4. Open the water inlet valve, wait for stable operation and check that the displayed power does not exceed the specified maximum power.

5. Check for abnormalities. Identify faults using the code table and take prompt action.

4. Maintenance and repair

1. Do not run the circulator without water.

2. With the circulator stopped, close the inlet and outlet valves in that order and disconnect the power supply.

3. To restart after a period of inactivity, open the inlet and outlet valves in that order, then restore power.

4. To change the operating mode, see section 2.3 on page 6.

5. If a fault occurs, have qualified personnel carry out the work.



5 | PERFORMANCE CURVES

NEOS B 32/12

Head H in metres and flow rate Q in m³/h.

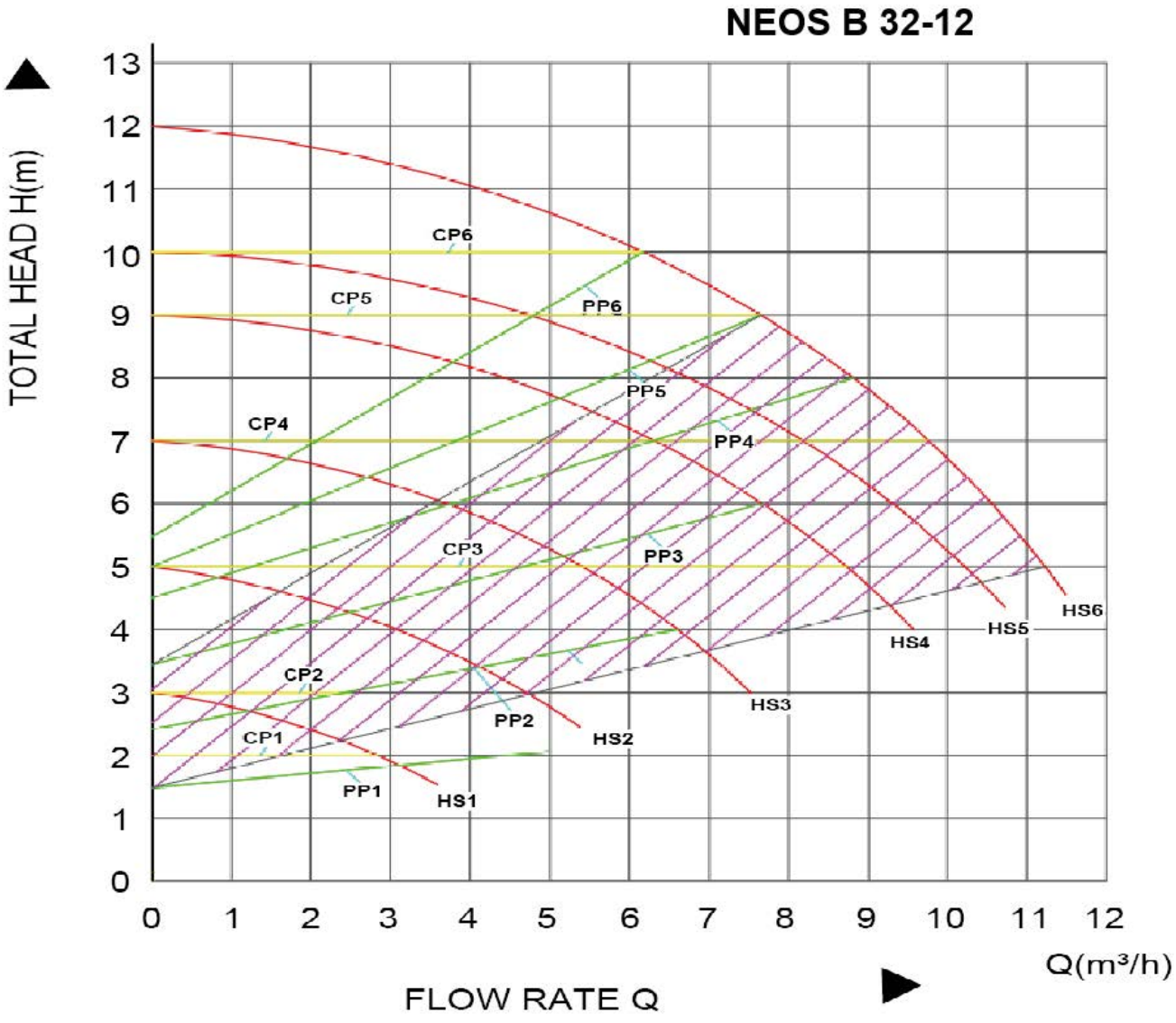

Control mode legend
HS: constant speed · CP: constant pressure
PP: proportional pressure · AUTO: automatic control

5 | PERFORMANCE CURVES

NEOS B 40/12

Head H in metres and flow rate Q in m³/h.

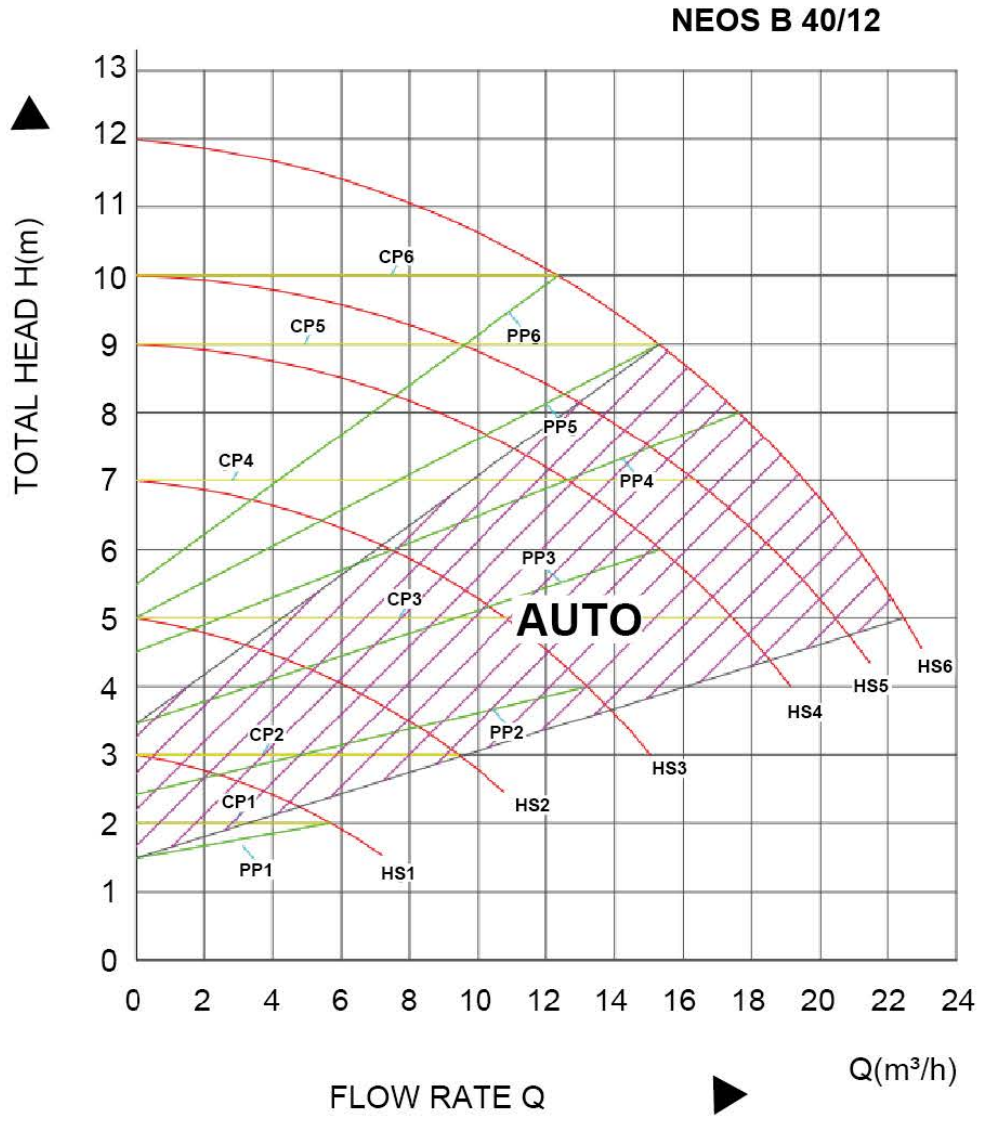

Control mode legend
HS: constant speed · CP: constant pressure
PP: proportional pressure · AUTO: automatic control

5 | PERFORMANCE CURVES

NEOS B 40/15

Head H in metres and flow rate Q in m³/h.

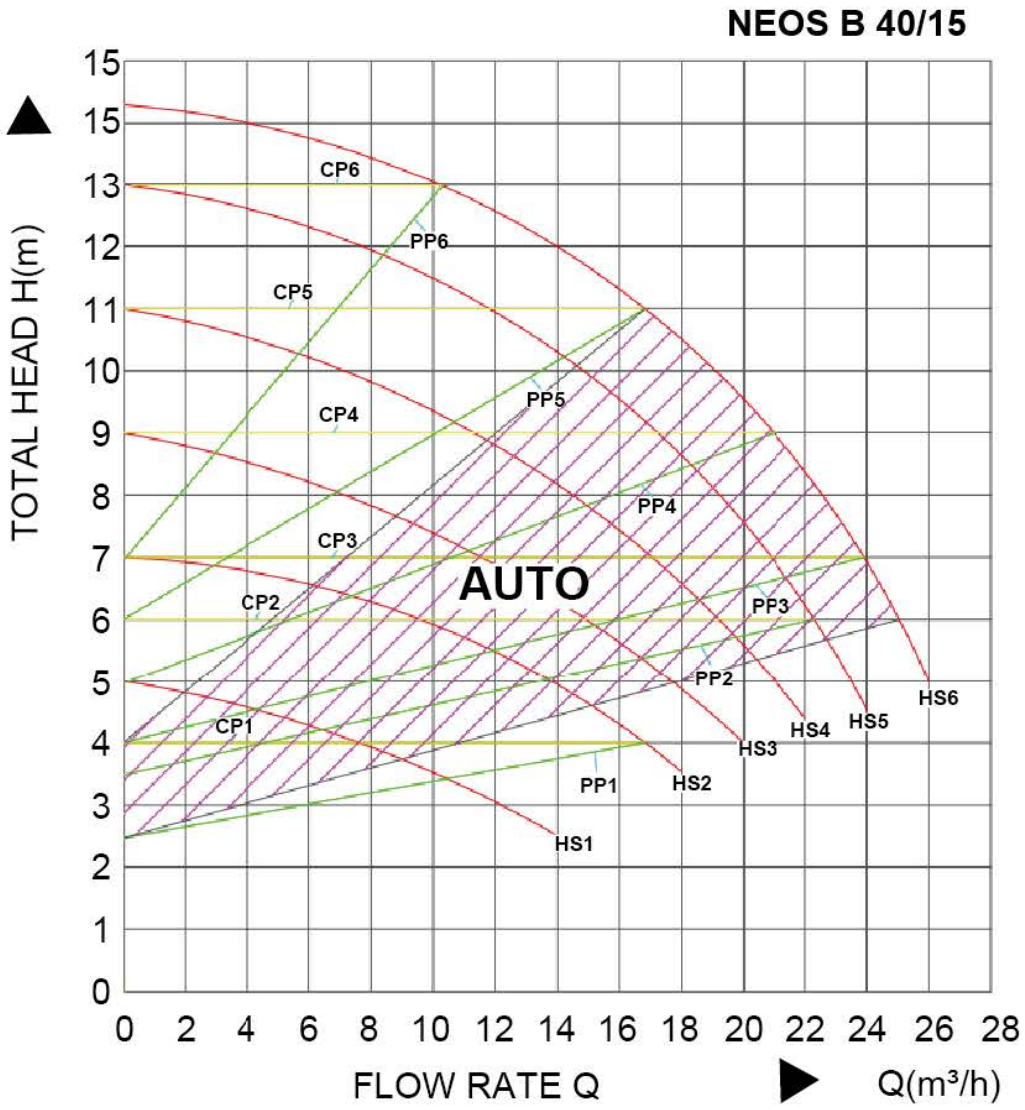

Control mode legend
HS: constant speed · CP: constant pressure
PP: proportional pressure · AUTO: automatic control

5 | PERFORMANCE CURVES

NEOS B 40/18

Head H in metres and flow rate Q in m³/h.

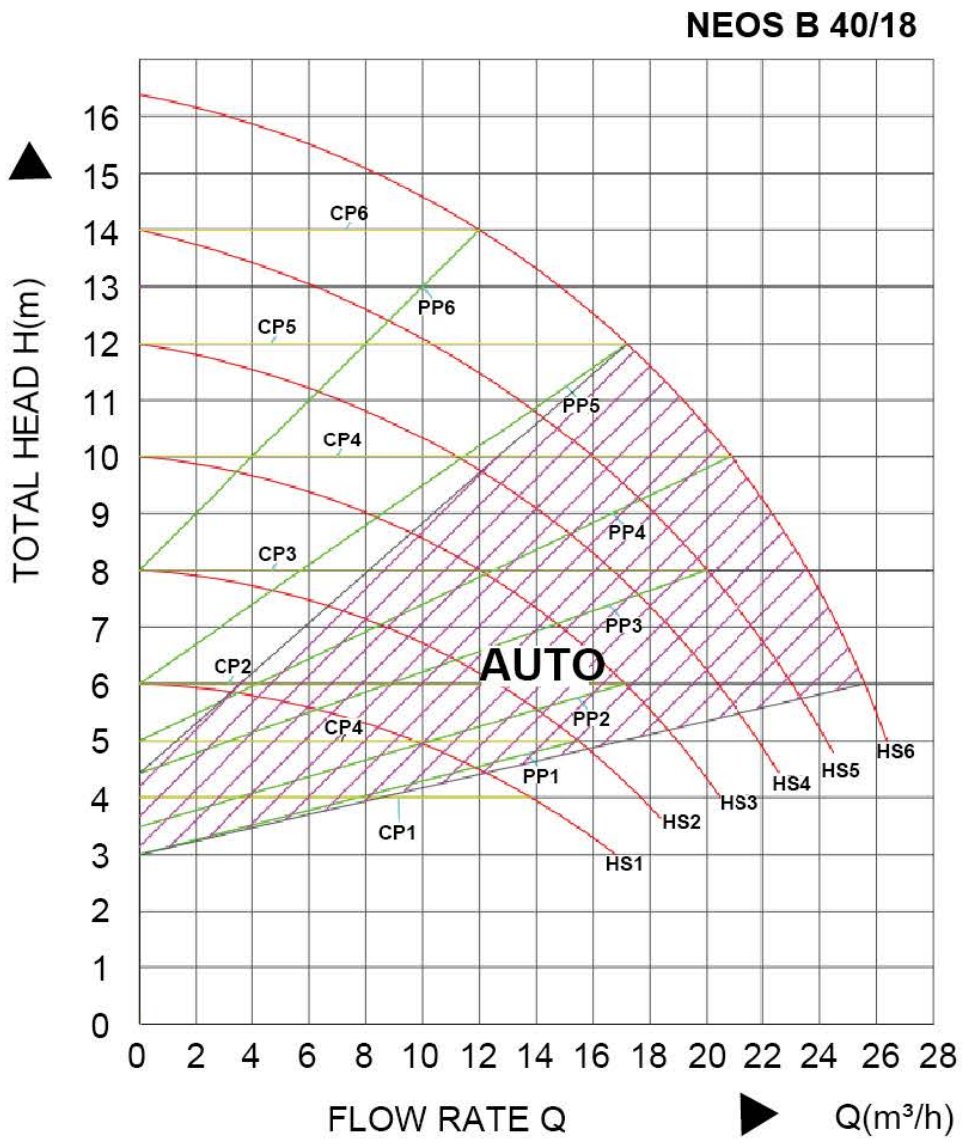

Control mode legend
HS: constant speed · CP: constant pressure
PP: proportional pressure · AUTO: automatic control

5 | PERFORMANCE CURVES

NEOS B 50/12

Head H in metres and flow rate Q in m³/h.

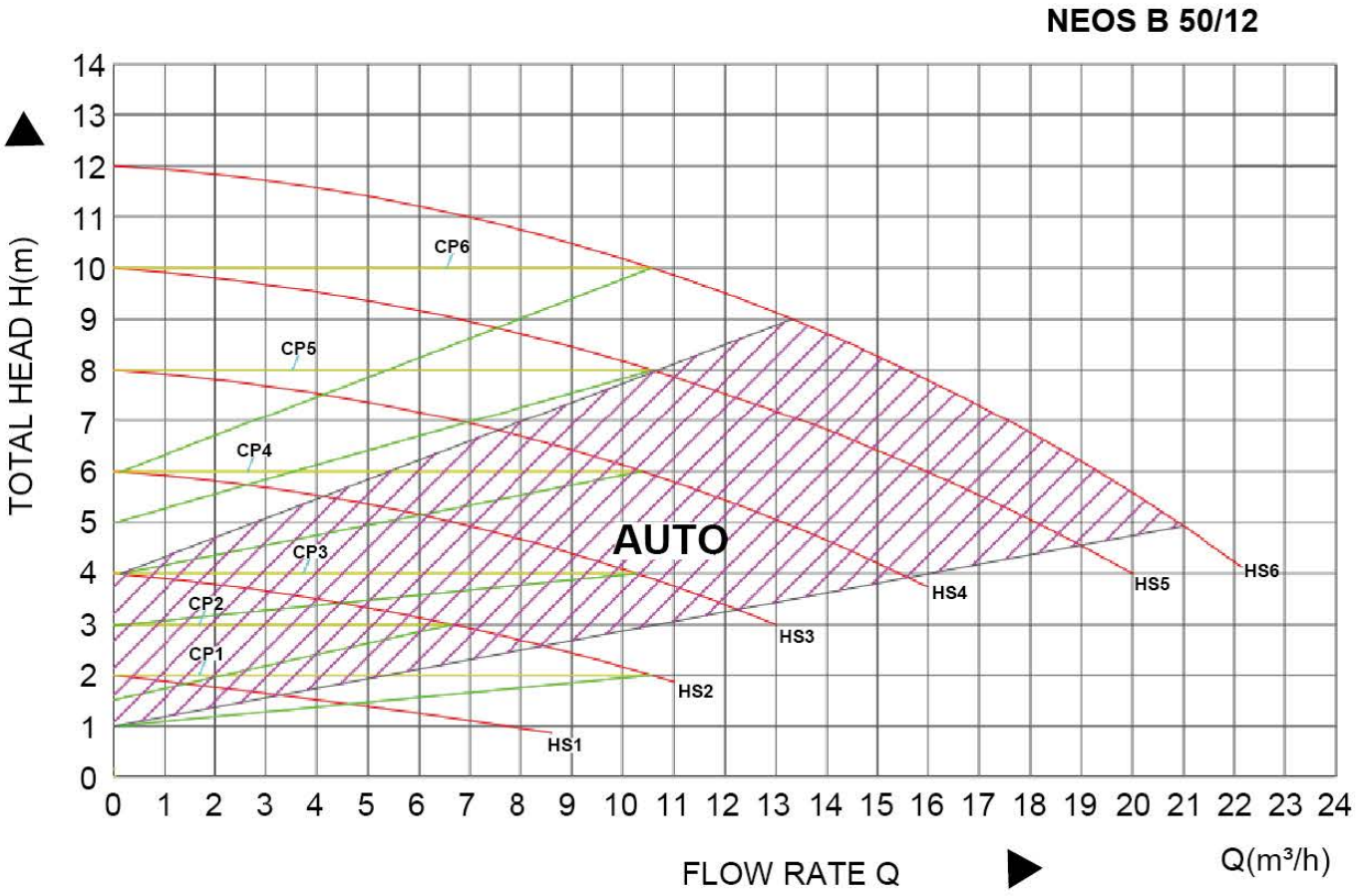

Control mode legend
HS: constant speed · CP: constant pressure
PP: proportional pressure · AUTO: automatic control

5 | PERFORMANCE CURVES

NEOS B 50/18

Head H in metres and flow rate Q in m³/h.

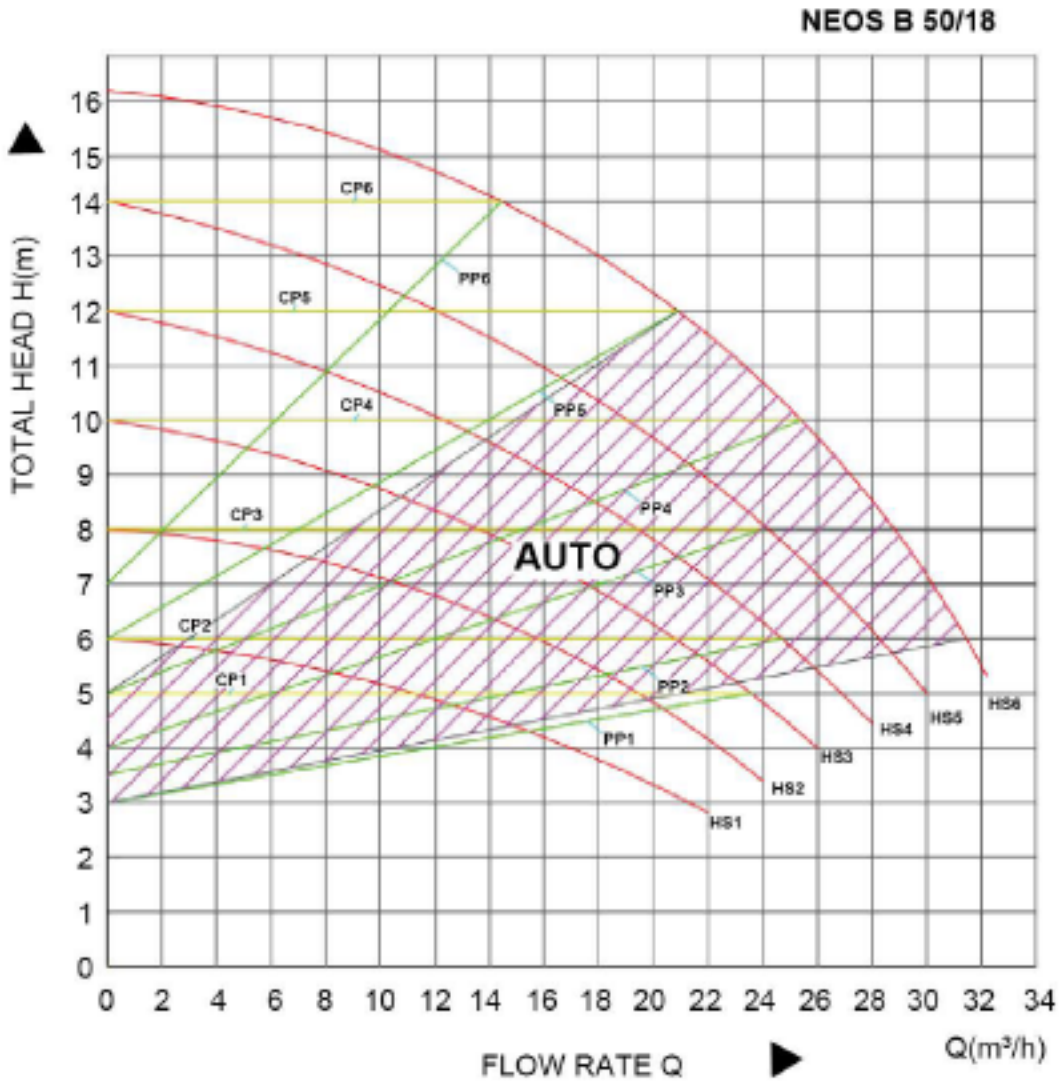

Control mode legend
HS: constant speed · CP: constant pressure
PP: proportional pressure · AUTO: automatic control

5 | PERFORMANCE CURVES

NEOS B 65/15

Head H in metres and flow rate Q in m³/h.

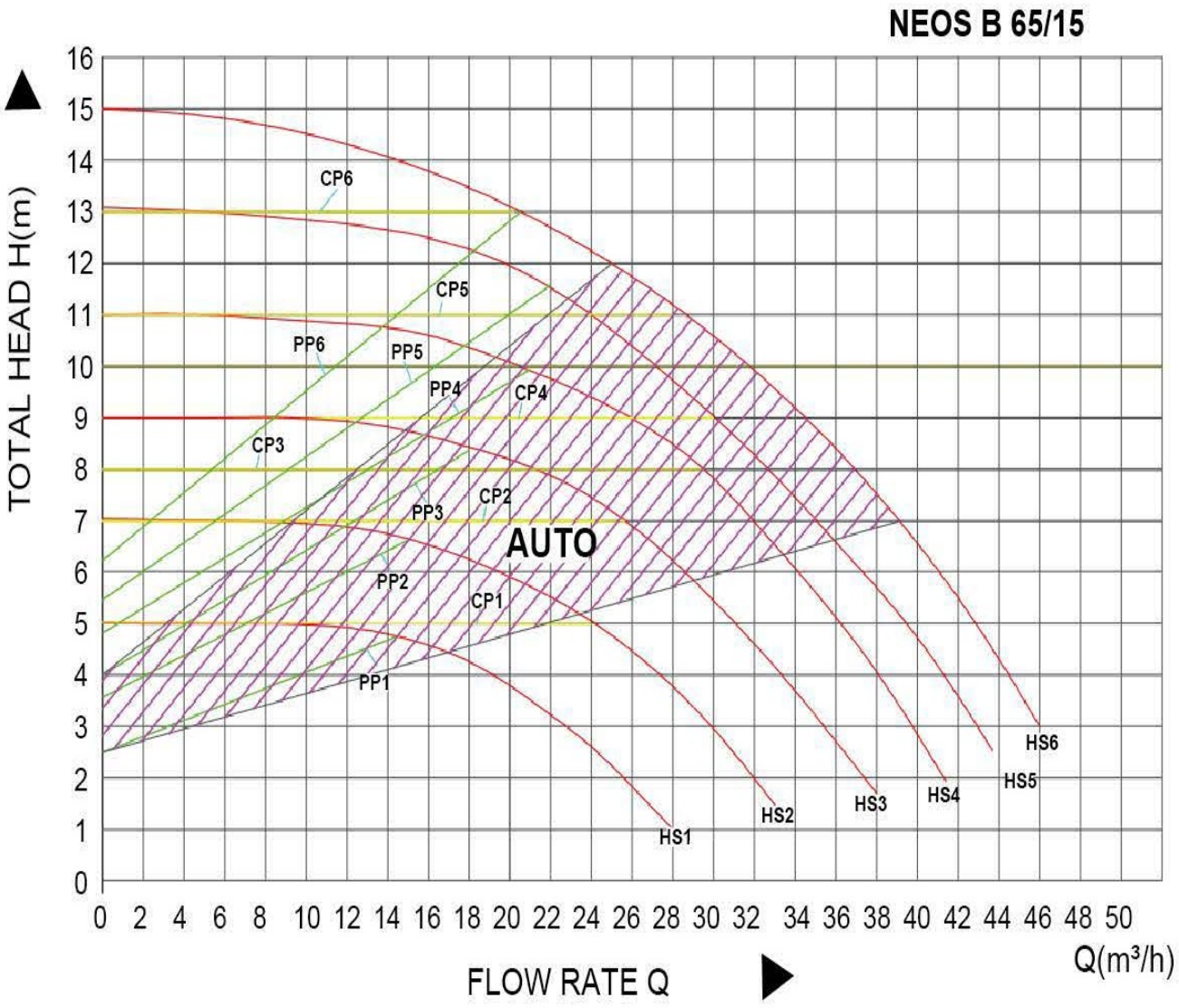

Control mode legend
HS: constant speed · CP: constant pressure
PP: proportional pressure · AUTO: automatic control

5 | PERFORMANCE CURVES

NEOS B 80/15F 360

Head H in metres and flow rate Q in m³/h.

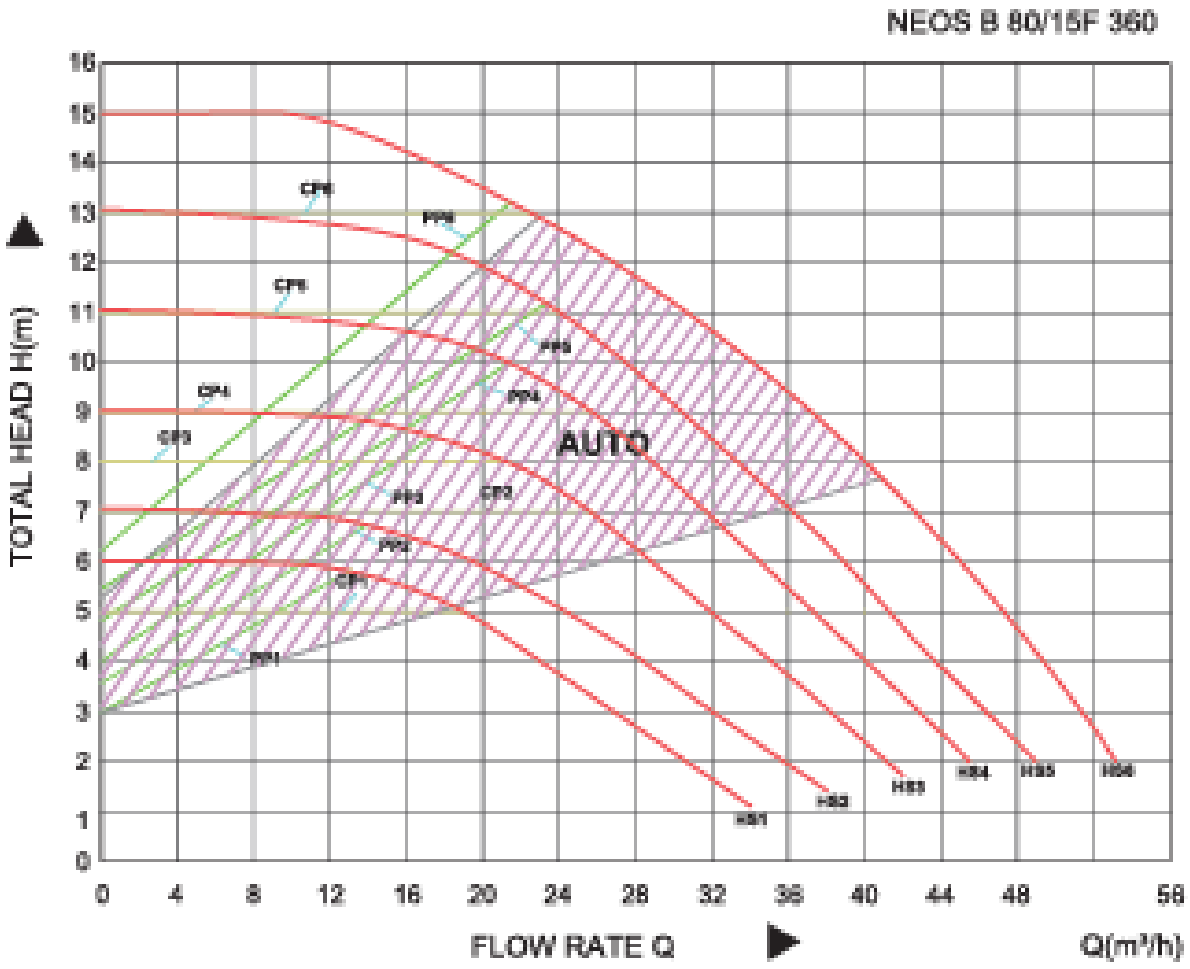

Control mode legend
HS: constant speed · CP: constant pressure
PP: proportional pressure · AUTO: automatic control