HIGH-EFFICIENCY CIRCULATORS

Mega 25-12/180

Class A energy-saving circulation pump



Identification	Document details
Product model	Mega25-12/180
Version	A/0
Document	Form F220AZ26
Applicable customer	Universal version
Original issue date	27/06/2024

DOCUMENT CONTROL

Revision history

Document: Form F220AZ26

Serial no.	Count	Revision summary	Author	Issue date	Change no.
1					
2					
3					

CONTENTS | 1 OF 2

Contents

1. Product introduction 5
1.1 Product model description 5
1.2 Applications 5
1.3 Product certification 5
2. Product parameters 5
2.1 Basic parameters 5
2.2 Motor type 5
2.3 Inrush current 6
2.4 Performance curves 6
3. Product operating conditions 8
3.1 Fluid requirements 8
3.2 Operating environment requirements 8
3.3 Storage environment requirements 8
3.4 Water temperature and inlet pressure 8
4. Product installation instructions 8
4.1 Nameplate parameters 8
4.2 Product installation orientation 9
4.3 Insulating cotton cover 9
4.4 Starting and stopping the pump 10
4.5 Control panel display 10
4.6 Electrical connection 11
4.7 Signal connection 11
4.7.1 Signal connection 11
4.7.2 PWM input circuit 11
4.7.3 PWM output circuit 11
4.8 Electrical control instructions 12
4.8.1 PWM signal input 12
4.8.2 PWM feedback 13
4.8.3 Fault protection 14

CONTENTS | 2 OF 2

Contents

5. Product tests 15
5.1 Factory inspection 15
5.2 Reliability tests 15
6. Packaging method 15
6.1 Individual product packaging 15
6.2 Mass-production packaging 16
7. Common faults: causes and remedies 16
8. Operating instructions 17
8.1 Moving and dismantling 17
8.2 Preventing frost damage 17
8.3 Pumps unused for long periods 17
8.4 Motor overheating and abnormal operation 17
8.5 Preventing children from touching the pump 17
8.6 Installation orientation 17
8.7 Installation protection 17
8.8 Water hammer impact 17
8.9 Power supply cables 17
8.10 Preventing dry running 17
8.11 Pumped liquids 17
8.12 Scale inhibitors 18
8.13 Power supply earthing 18
8.14 Maintenance precautions 18
9. Disclaimer 18
Appendices 19
a. Assembly drawing and main component materials 19
b. Installation dimensions 20
c. Power supply interface 20
d. Power cable accessories 20
e. Signal cable accessories 21
f. Pipe accessories 22
g. Exploded view 22

1-2 | INTRODUCTION AND SPECIFICATIONS

Product and technical data

1.1 Model description

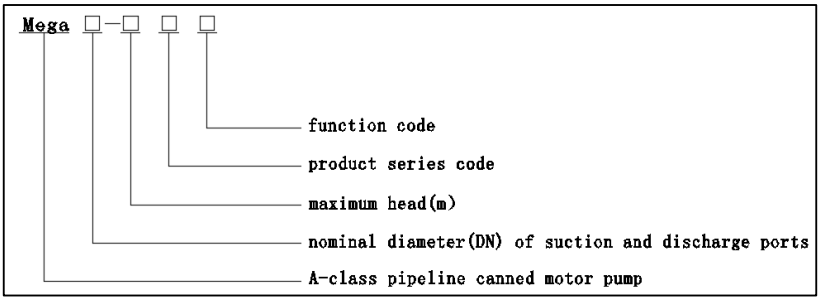

Example: Mega25-12 identifies a pump with a nominal diameter (DN) of 25 mm at the inlet and outlet ports and a maximum head of 12 m.

1.2 Applications

Heat-pump dual-supply systems, mixed-water underfloor heating, heat-pump hot water, HVAC, boilers and other heating and cooling solutions. Suitable for refrigerants such as R290.

1.3 Product certification

CE, GS, TÜV, electromagnetic compatibility, RoHS directive, FLOW, EEI ≤ 0,23 - Part 2. Note: RoHS 2.0 and REACH are third-party test reports.

2.1 Basic parameters

Maximum flow: 6 m³/h	Maximum head: 12 m	Rated flow: 5,5 m³/h	Rated head: 7,5 m
Rated voltage: AC 220-240 V	Rated current: 1,2 A	Frequency: 50/60 Hz	Maximum power: 230 W
Design pressure: 1,0 MPa	Noise: < 40 dB (UN)	Standby power: ≤ 4 W	Protection rating: IP44
Inrush current: < 10 A	Temperature class: TF110	Bare pump weight with cable: 5 kg ± 5%	Speed: 1000-4900 rpm

2.2 Motor type

Parameter	Value
Motor type / enamelled wire	Permanent-magnet synchronous / copper
Magnetic material	Neodymium iron boron
Cold DC resistance at 20 °C / insulation	8,6 ± 5% Ω / H

2 | PERFORMANCE

Inrush current and curves

2.3 Inrush current

Test conditions	Value
Temperature	T = 20 ± 5 °C
Cold inrush current	< 10 A
Duration	< 4 ms

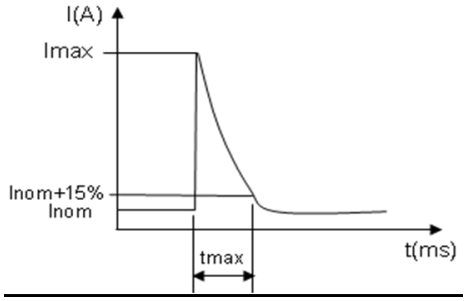

2.4 Performance curves

The hydraulic curves refer to clean water at ambient temperature. A different fluid may reduce pump performance; consider the properties of the liquid when selecting the pump.

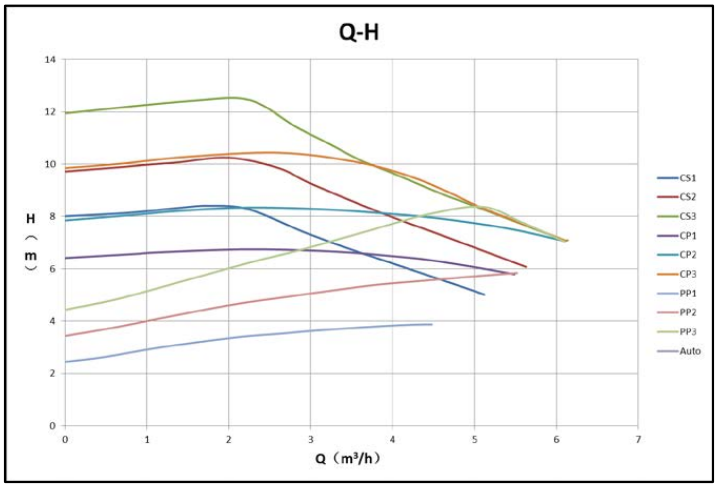

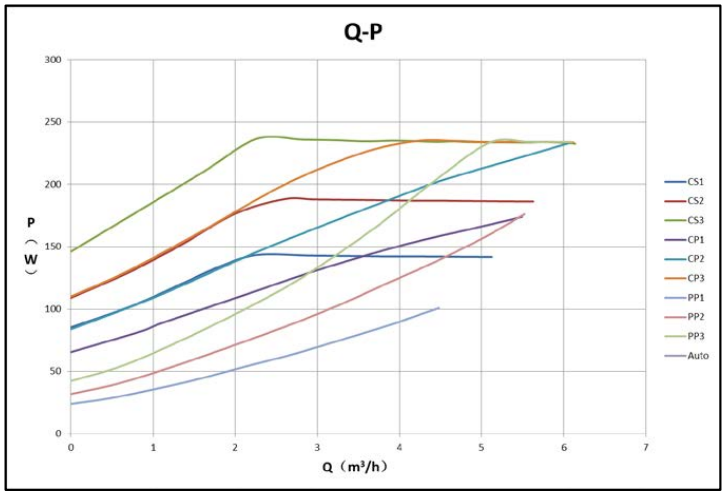

2 | PERFORMANCE

PWM mode curves

Performance curves for different duty cycles in PWM mode (for reference only).

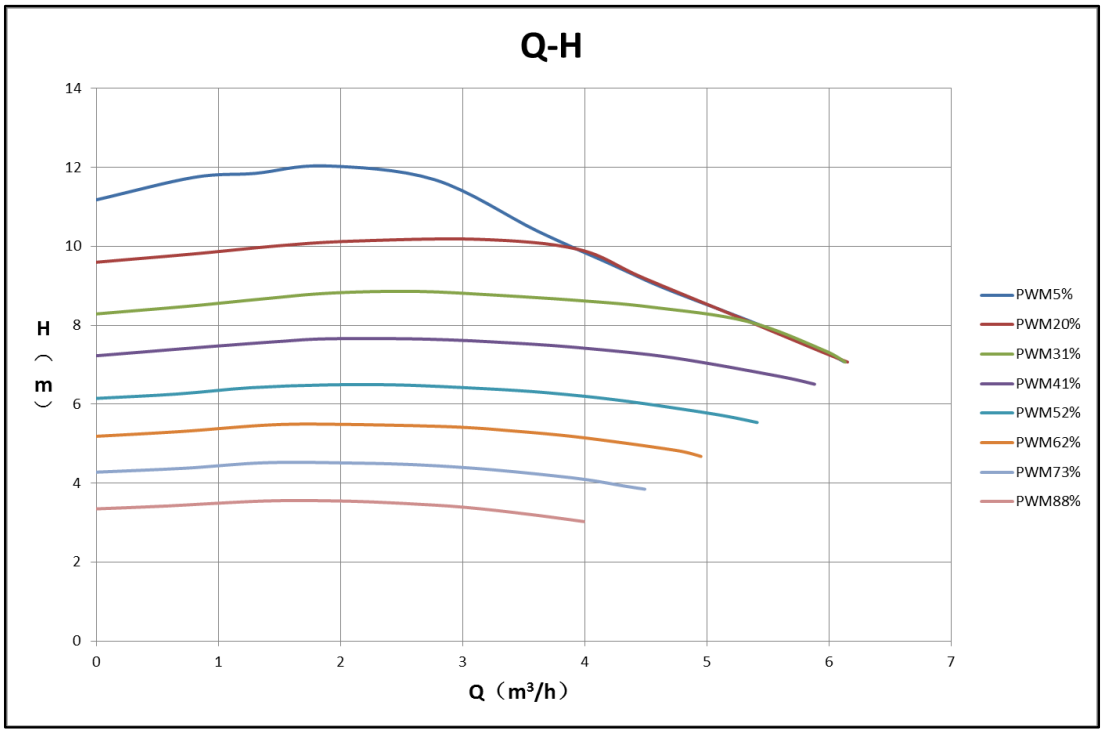

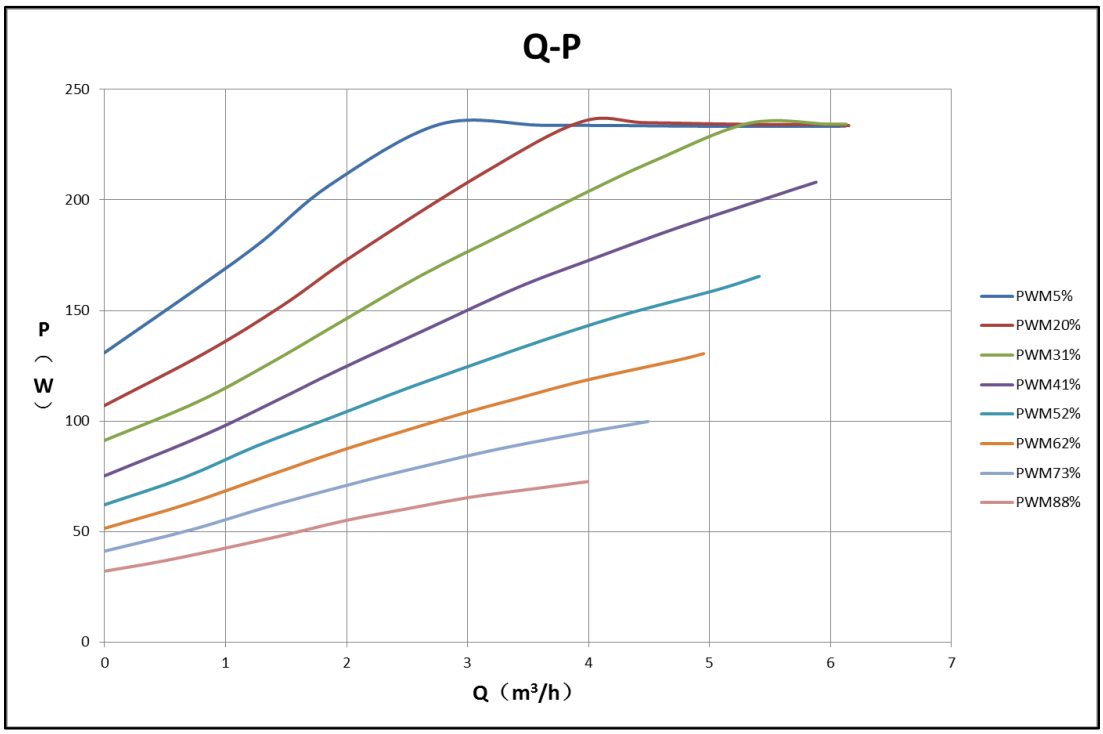

3-4 | CONDITIONS AND INSTALLATION

Operating conditions

Note: for applications outside the specified scope, contact One Pump in advance.

3.1 Fluid requirements

Parameter	Value
Fluid	Water or water + glycol mixture (≤ 50%)
Fluid temperature / pH	−20 °C – 110 °C / 6,5–8,5
Hardness	≤ 25 °dH
Solid impurities	Diameter and length ≤ 0,1 mm; volume ratio ≤ 0,1%

3.2 Operating environment

Horizontal shaft; altitude < 1000 m. Ambient temperature: -30 °C to 70 °C, with no freezing in the pipework or pump. Ambient humidity ≤ 95%.

3.3 Storage environment

Temperature: -30 °C to 70 °C, with no freezing in the pipework or pump. Humidity ≤ 95%.

3.4 Water temperature and inlet pressure

Liquid temperature	< 75 °C	95 °C	110 °C
Inlet pressure	0,5 bar	1 bar	1,5 bar
Equivalent head	5 m	10 m	15 m

4.1 Nameplate parameters

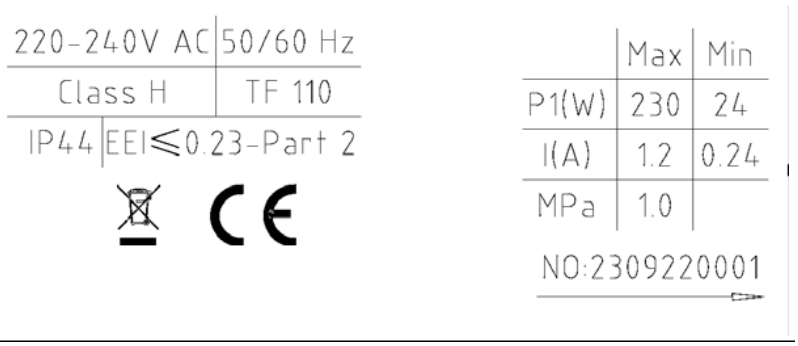

4 | INSTALLATION

Positioning and insulation

4.2 Installation orientation

When pre-installing the circulation pump, keep its shaft horizontal; the permitted shaft installation angle is ± 5 °. The installation in the system must prevent large amounts of gas from accumulating in the pump chamber, as this could impair normal operation.

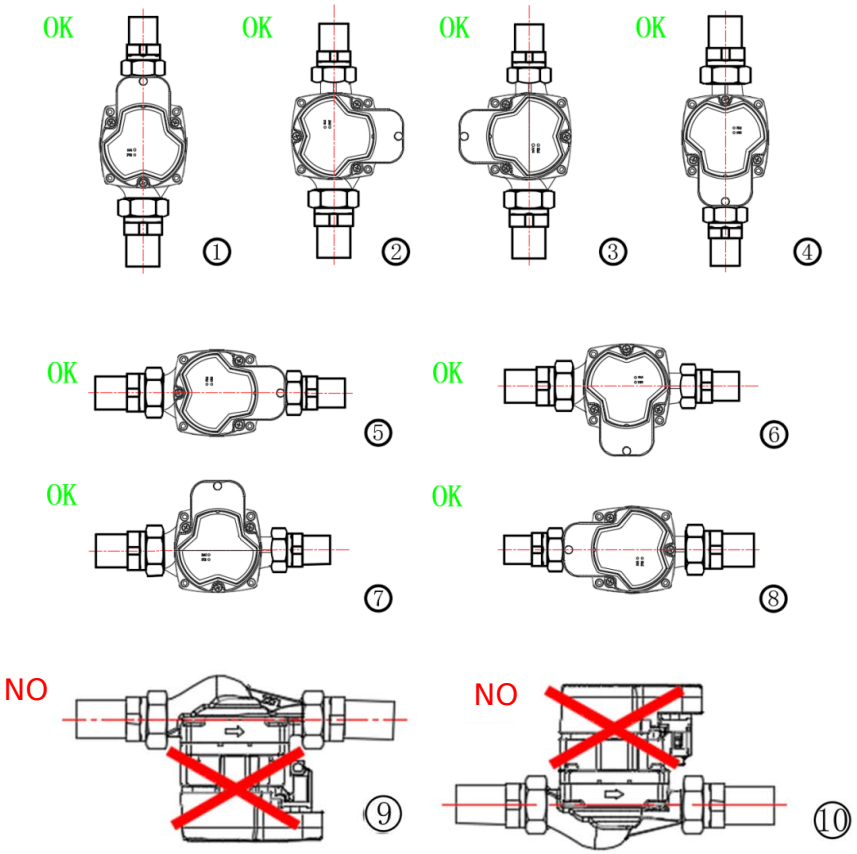

4.3 Insulating cotton cover



4 | START-UP AND CONTROL

Start-up and control panel

4.4 Starting and stopping the pump

Start-up: less than 8 s from power-on to maximum speed. In PWM mode, whether starting from an unpowered stop or standby, 90% of maximum speed must be reached within 8 s. Stop: less than 1 s from power disconnection to pump shutdown.

4.5 Control panel display

The default mode at power-on is CS3. Press the button briefly once to switch to the next mode; the table shows the number of presses, the illuminated area and the operating mode.

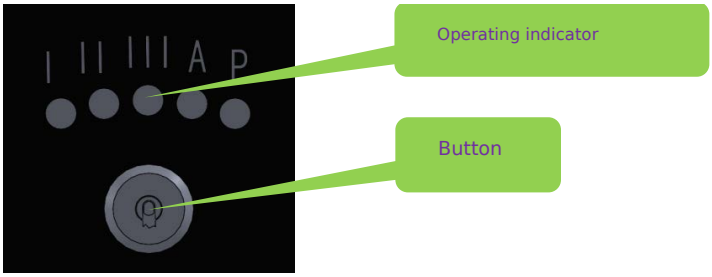

Button presses	Illuminated area	Operating mode	Indication
0	CS3	Constant speed - high	
1	AUTO	Automatic adaptation	
2	PP1	Proportional pressure - low speed	
3	PP2	Proportional pressure - medium speed	
4	PP3	Proportional pressure - high speed	
5	CP1	Constant pressure - low speed	
6	CP2	Constant pressure - medium speed	

4 | CONNECTIONS

Power supply and PWM signal

4.5 Control panel display (continued)

7	CP3	Constant pressure - high speed	
8	CS1	Constant speed - low	
9	CS2	Constant speed - medium	
/	P	PWM control	

4.6 Electrical connection

Power supply: 220-240 V AC, 50/60 Hz. Power cable: 3 × 0,5 mm².

4.7 / 4.7.1 Signal connection

Input: red wire. Feedback: green wire. Ground: yellow wire. Open-collector/drain PWM output: connect a pull-up resistor; 5 V DC is recommended.

4.7.2 PWM input circuit

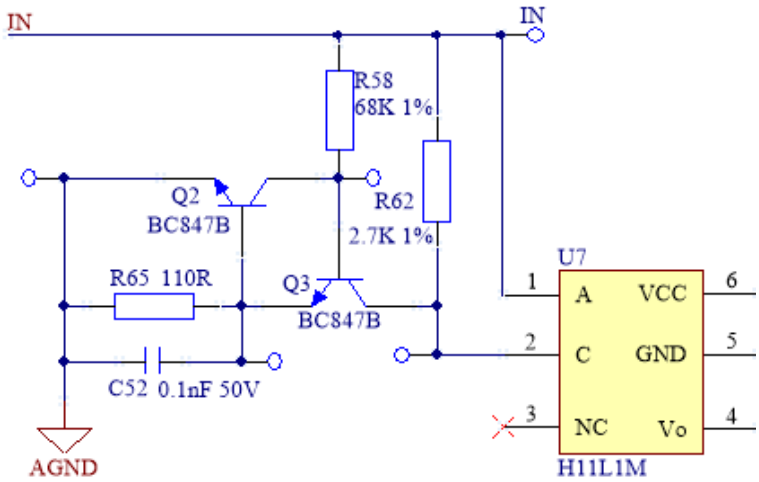

4.7.3 PWM output circuit

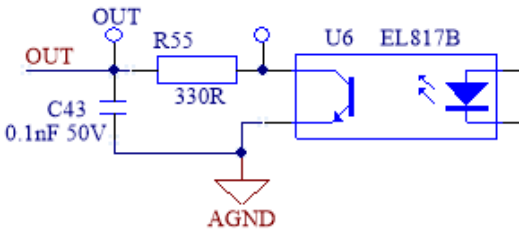

4 | ELECTRICAL CONTROL

PWM input

4.8 / 4.8.1 - At a fixed frequency, different duty cycles correspond to different motor speeds. Control is inversely proportional.

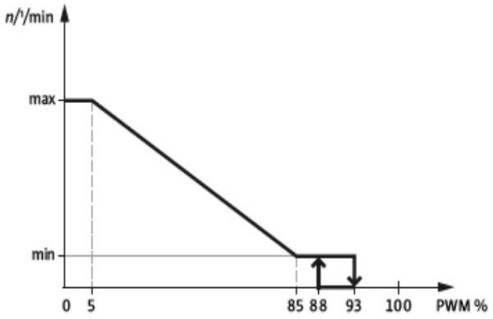

PWM input (%)	Pump status
0	Non-PWM mode at maximum speed; no default PWM signal.
≤ 5	Operation at maximum speed.
> 5 – ≤ 85	Speed decreases linearly from maximum to minimum.
> 85 – ≤ 88	Operation at minimum speed.
> 88 – < 93	Hysteresis prevents starting and stopping when the signal fluctuates near the speed-change threshold.
≥ 93 – ≤ 100	Standby: the pump stops operating.
Detection accuracy	± 1: with a 20% signal, the effective duty cycle is 19% to 21%.

With PWM below 5%: maximum speed, maximum input power 230 W and maximum head 12 m.

PWM input parameter	Value
Current isolation in the pump	Yes
Frequency	100–4000 Hz
High-level voltage	4,0–24 V
Low-level voltage	≤ 0,7 V
High-level current	Max 10 mA at 100 Ω
Duty cycle	0–100%
Polarity	Fixed
Rise and fall time	≤ T/1000

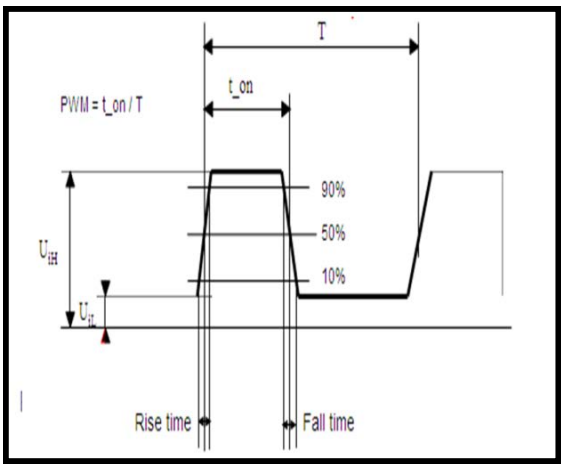

4 | ELECTRICAL CONTROL

PWM feedback

4.8.2 - Voltage amplitude: 5-32 V. Frequency: 75 ± 5% Hz. Relationship between output signal and pump operating status.

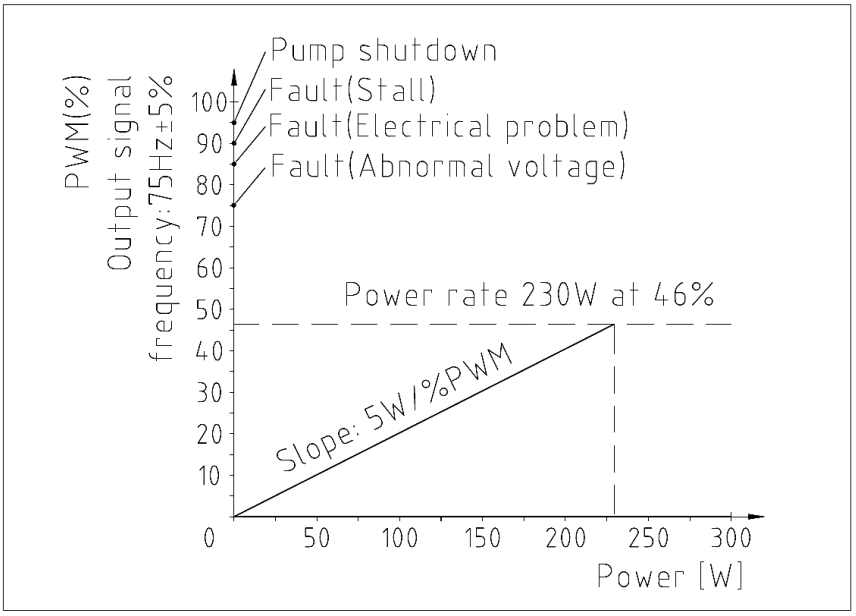

PWM output (%)	Status	Behaviour
0–46	0-230 W (slope 3 W/% PWM)	
75	Abnormal-voltage warning	The pump stops and resumes normal operation when the voltage returns to the protection recovery value.
85	Stopped due to an electrical problem: overcurrent, open phase, light load or overtemperature.	The pump resumes operation once the fault is cleared. After the preset number of consecutive protection events, it no longer restarts and must be power-cycled.
90	Stopped due to stall	The pump resumes operation once the fault is cleared. After 5 consecutive protection events, it no longer restarts and must be power-cycled.
95	Pump stopped	Pump stopped

4.8.3 | PROTECTION

Fault protection

1. Overvoltage protection

During the power-on test, if the detected input voltage exceeds 285±10 V, overvoltage protection activates after 2 seconds: the indicators flash once simultaneously and the pump stops. When voltage returns to 270 V±10 V, normal operation resumes.

2. Undervoltage protection

During the power-on test, if the detected input voltage is below 140±10 V, undervoltage protection activates after 2 seconds: the indicators flash twice simultaneously and the pump stops. When voltage returns to 150 V±10 V, normal operation resumes.

3. Overcurrent protection

If the hardware current is excessive at full load, overcurrent protection activates: the pump stops immediately, the indicators flash 3 times simultaneously, and the pump restarts after 8 seconds. If the fault is not cleared, this cycle repeats.

4. Open-phase protection

If the motor has an open phase, the indicators flash 4 times simultaneously and the pump stops immediately. It restarts after 8 seconds. After 5 consecutive protection events, the pump enters full protection and no longer restarts. It must be power-cycled.

5. Stall protection

After 3 seconds of pump stall, the controller activates stall protection: the indicators flash 5 times and the pump stops. It restarts after 8 seconds. After 5 consecutive protection events, it enters full protection and no longer restarts if the fault persists. The pump must be power-cycled.

6. Light-load protection

After 10 seconds of light-load operation, light-load protection activates: the indicators flash 6 times and the pump stops. It restarts after 8 seconds. After 5 consecutive protection events, the pump enters full protection and no longer restarts. It must be power-cycled.

7. Overtemperature protection

At rated voltage and frequency, with high ambient and water temperatures, if the IPM module surface exceeds 102±10%°C, the pump stops and the indicators flash 7 times simultaneously. Below 99±10%°C at the IPM surface, the pump operates at reduced power, 0,5 times rated power.

8. Overheating protection

The pump operates at reduced power. At rated voltage and frequency, with high ambient and water temperatures, if the IPM module surface exceeds 98±10%°C, the pump runs at 0,5 times rated power. Below 93±10%°C, normal operation resumes.

5-6 | TESTING AND PACKAGING

Product tests and packaging

5.1 Factory inspection

Product inspections		
Motor inter-turn test	Motor insulation test	Withstand-voltage test
Leakage-current test	Rotation-direction test	Complete-unit leak test
Drive test	PWM signal test	N/A

5.2 Reliability tests

Reliability tests		
Pump performance	Noise	Vibration
High ambient temperature and low water temperature	Low ambient temperature and high water temperature	Hot and humid storage
Temperature rise	Condensation protection structure	Protection level
Ageing	Storage	Water hammer
Locked-rotor protection	On/off endurance	Service life

6 / 6.1 Individual product packaging

Carton packaging: 4 or 8 units per box.



6-7 | PACKAGING AND SERVICE

Packaging and troubleshooting

6.2 Mass-production packaging

Pallet: 150 units. Internal space (mm): length 1155, width 725, height 905.

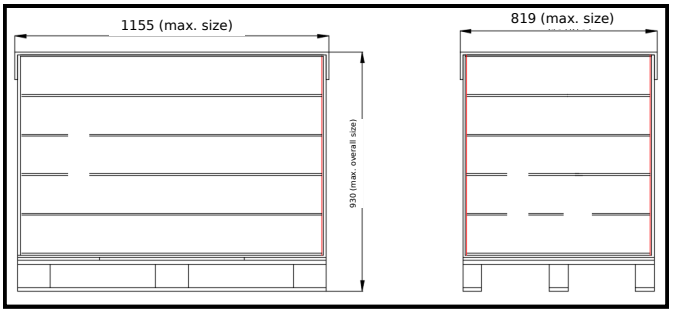

7. Common faults: causes and remedies

Fault	Cause	Remedy
Pump does not start	Power disconnected or abnormal voltage	Check the electrical connection and voltage
	Equipment fuse blown	Replace the fuse
	Power switch or circuit breaker open	Close the circuit breaker
	Pump malfunction	Replace the pump
	Voltage too low or too high	Check that the power supply is within the specified range
	Pump blocked	Remove impurities
Pump running with no pressure displayed	No water inlet or outlet valve is closed in the system	Add water or open the valves
	Air in the pump or pipework	Run the pump briefly after venting
Noise in the pump	Air present in the pump	Vent air from the system
	Impurities rubbing inside the pump	Clean the pump
	Wear-ring or filter-sleeve friction; bearing and mechanical-seal abrasion	Replace the pump
	Cavitation	Reduce outlet valve opening or increase inlet pressure
Insufficient flow	Poor pump performance	Select a higher-power pump
	Pipework blocked	Clean the pipework and filter
Pump cannot be controlled	No signal on the signal line	Poor cable connection: reconnect or replace

8 | PRODUCT USE

Operating instructions

8.1 Moving and dismantling

Before moving or dismantling the circulation pump, drain the system liquid or close the isolating valves on both sides of the pump to prevent burns from any hot or pressurised liquid conveyed by the pump.

8.2 Preventing frost damage

In winter, if the circulation-pump system is not operating or ambient temperature is below 0 °C, drain the pipework to prevent freezing and cracking of the pump body.

8.3 Circulation pumps unused for long periods

Close the circulation pump's inlet and outlet valves and disconnect the power supply.

8.4 Motor overheating and abnormal operation

Close the circulation pump's discharge valve, disconnect the power and immediately contact your local dealer or service centre.

8.5 Preventing children from touching the pump

Keep this product out of children's reach. After installation, provide barriers to prevent children from touching it.

8.6 Circulation-pump installation orientation

During installation, keep the circulation pump shaft horizontal; see the detailed views in Section 4.2.

8.7 Installation protection

Install the circulation pump in a location protected from rain, water and sunlight.

8.8 Water hammer impact

Do not strike the circulation pump directly with hard objects; water hammer must not exceed 10 kilograms.

8.9 Power supply cables

The motor power cables have no special strain-relief structure; do not pull directly on them, to avoid breaking the cable.

8.10 Preventing circulation-pump dry running

This prevents product wear, abnormal noise and even burning out of the unit.

8.11 Pumped liquids

The pumped liquid must be free-flowing, clean, non-corrosive and non-explosive, with no solid particles, fibres or mineral oils. Pumping flammable fluids is prohibited.

8-9 | USE AND CONDITIONS

Maintenance and provisions

8.11 Pumped liquids (continued)

Do not use liquids outside the specifications. High fluid viscosity reduces circulation-pump performance. Consider the viscosity of the pumped liquid when selecting a pump.

8.12 Scale inhibitors

Sentinel X100 scale inhibitor is recommended for the circulation pump, at a ratio of water 100 to scale inhibitor 3,75.

8.13 Power supply earthing

The power plug must be properly earthed, and its earth pin must connect reliably to the socket's earth contact. Unauthorised changes to the earthing are prohibited.

8.14 Maintenance precautions

If the pump's position needs adjustment during operation, or movement could bring someone into contact with it, disconnect the power first to prevent accidents.

9. Disclaimer

This specification is issued by One Pump S.r.l., which reserves the right to make changes concerning matters not covered herein. Use the product within the specified conditions and scope. Exceeding these conditions may damage it. If site conditions exceed the specifications, consult One Pump in advance. One Pump S.r.l. reserves the right of final interpretation for matters not addressed in the specification and related explanations.

APPENDIX A | COMPONENTS

Assembly drawing and materials

a. Assembly drawing and main component materials

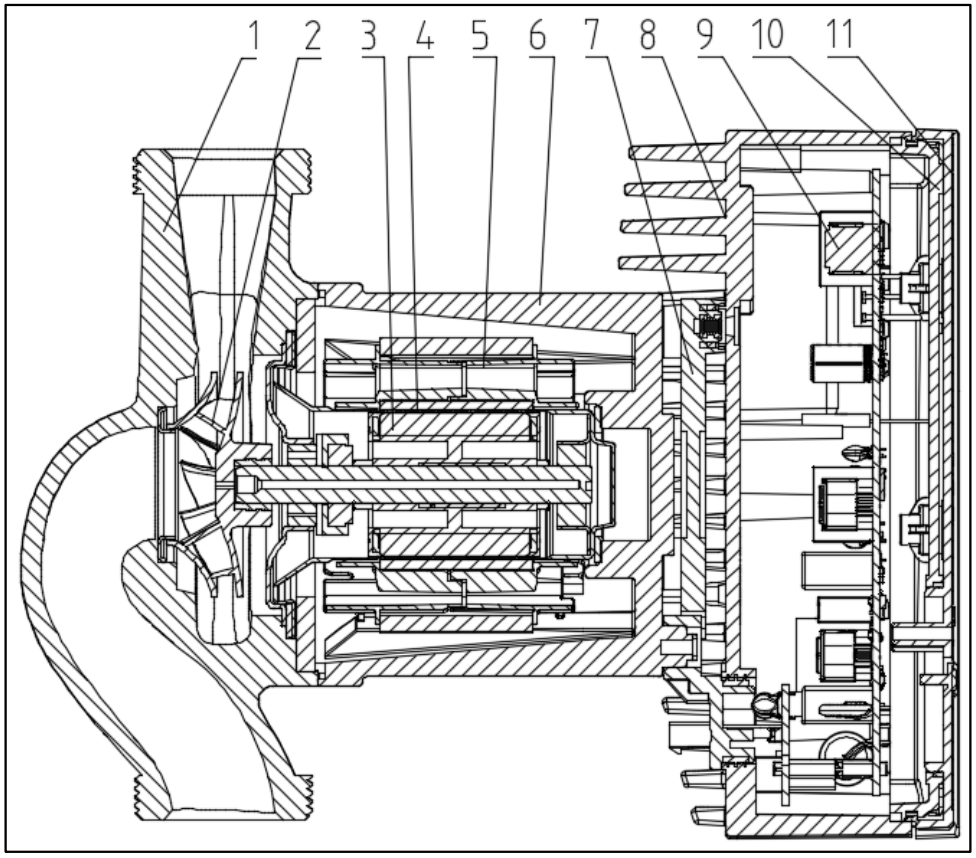

No.	Part	Material	Note
1	Pump body	Cast iron	
2	Impeller	Composite material	
3	Rotor assembly	Assembly	
4	Shielding sleeve assembly	SUS304	
5	Stator assembly	Assembly	
6	Motor base	Aluminium alloy	
7	Adapter plate	Assembly	
8	Terminal box base	Composite material	
9	Drive	Assembly	
10	Box lid	Composite material	
11	Display panel (Mylar)	PC	

APPENDICES B-D | DIMENSIONS AND WIRING

Dimensions and power supply

b. Installation dimensions

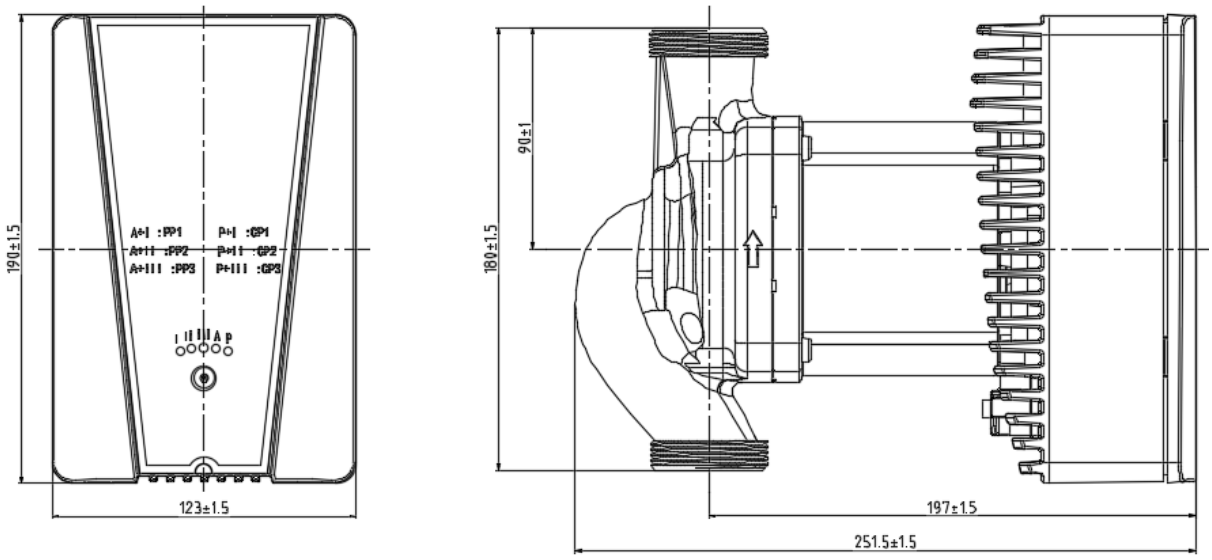

c. Power supply interface

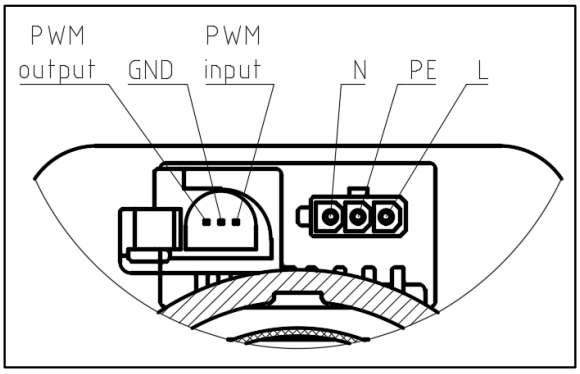

d. Power cable accessories

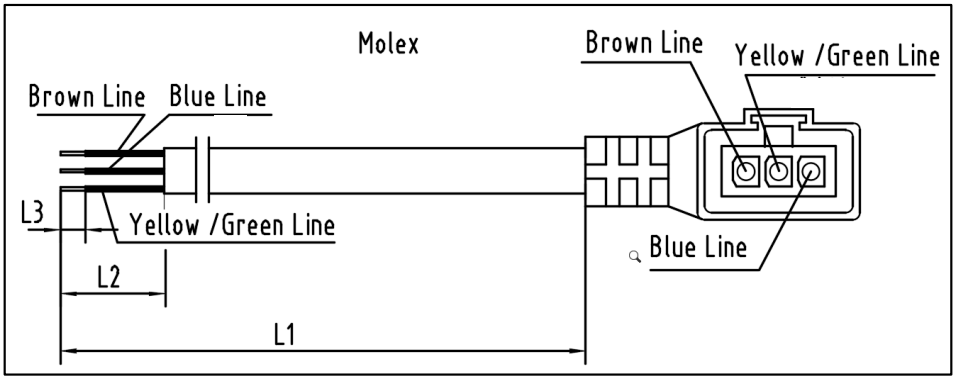

APPENDICES D-E | WIRING

Power and signal cables

d. Power cable - angled Molex connector

Wire cross-section (mm²)	L1 (mm)	L2 (mm)	L3 (mm)	Notes
0,5	600	30	10	
0,5	1000	30	10	
0,5	1500	30	10	
0,5	2000	30	10	
0,75	1500	30	10	

e. Signal cable accessories

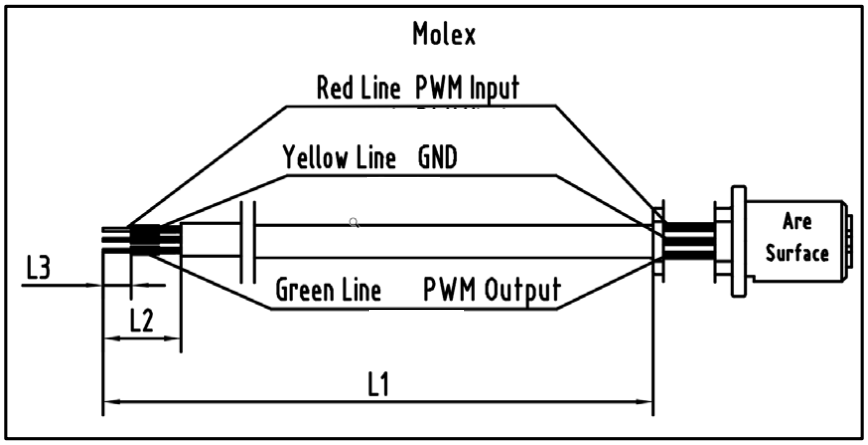

Straight Molex connector

Wire cross-section (mm²)	L1 (mm)	L2 (mm)	L3 (mm)	Notes
0,5	400	10	4	
0,5	1000	10	4	
0,5	1250	35	6	
0,5	1300	10	4	
0,5	2000	20	5	

APPENDICES F-G | ACCESSORIES AND COMPONENTS

Fittings and exploded view

f. Pipe accessories

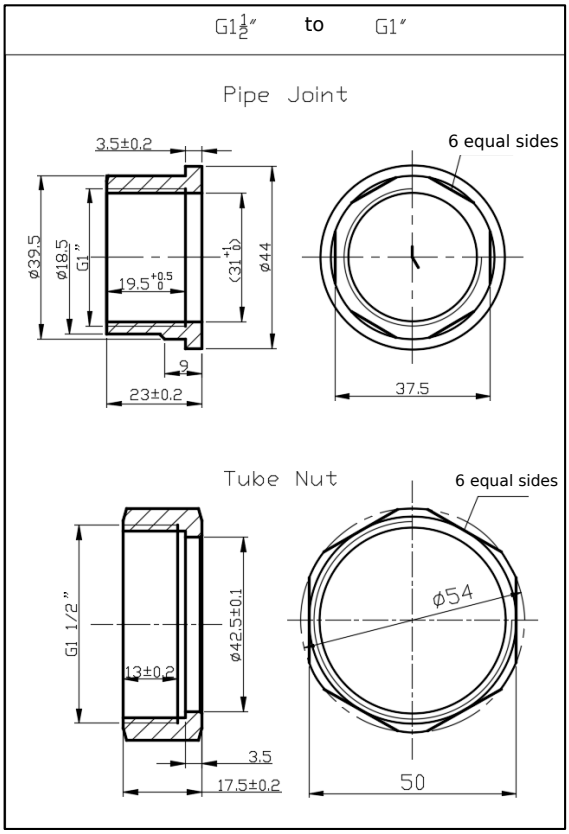

g. Exploded view

